AD-A143 170 USER'S GUIDE: COMPUTER PROGRAM FOR ANALYSIS OF TWO-DIMENSIONAL BEAM-COLUM.. (U) DAWKINS (WILLIAM P) STILLWATER OK W P DAWKINS MAR 84 WES-IR-K-84-5 1/1

UNCLASSIFIED DACW39-81-M-0715 F/G 9/2 NL

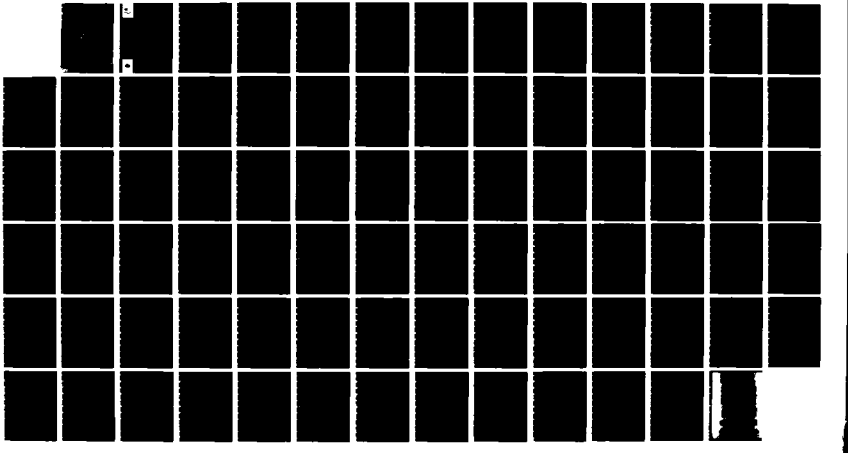

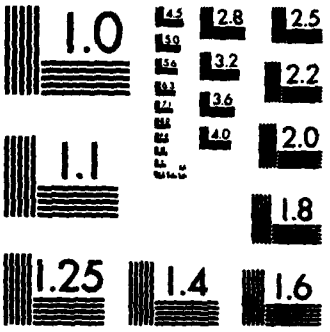

MICROCOPY RESOLUTION TEST CHART
NATIONAL BUREAU OF STANDARDS-1963-A

US Army Corps of Engineers

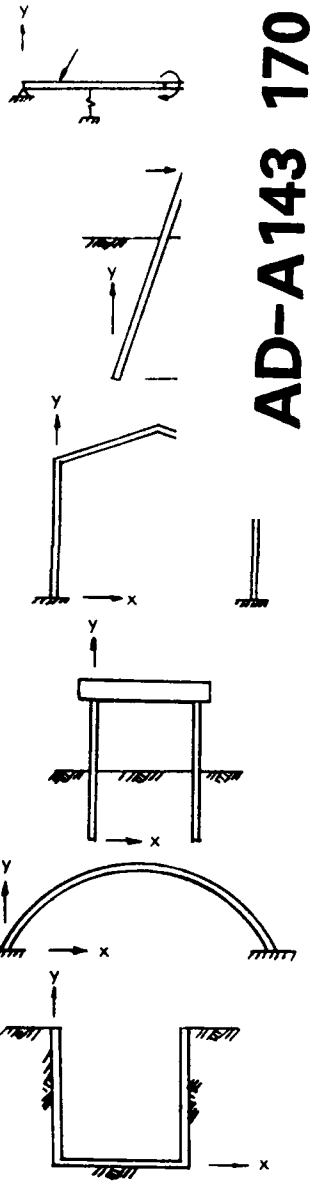

AD-A143 170

INSTRUCTION REPORT K-84-5

USER'S GUIDE: COMPUTER PROGRAM FOR ANALYSIS OF TWO DIMENSIONAL BEAM-COLUMNS WITH NONLINEAR SUPPORTS (CBNTBM)

by

William P. Dawkins

2801 Black Oak Drive
Stillwater, Okla. 74074

DTIC FILE COPY

DTIC ELECTE JUL 18 1984 A

March 1984
Final Report

Approved For Public Release, Distribution Unlimited

Prepared for Office, Chief of Engineers, U. S. Army
Washington, D. C. 20314

Under Contract No. DACW39-81-M-0715

Monitored by Automatic Data Processing Center
U. S. Army Engineer Waterways Experiment Station
P. O. Box 631, Vicksburg, Miss. 39180

84 07 17 006

Destroy this report when no longer needed. Do not return it to the originator.

The findings in this report are not to be construed as an official Department of the Army position unless so designated by other authorized documents.

The contents of this report are not to be used for advertising, publication, or promotional purposes. Citation of trade names does not constitute an official endorsement or approval of the use of such commercial products.

PROGRAM INFORMATION

Description of Program

CBNTBM, called XØØ65 in the Conversationally Oriented Real-Time Program-Generating System (CORPS) Library, is a computer program for the analysis of plane frame structures which are an assemblage of two-dimensional beam-column elements with linear and/or nonlinear spring supports. The centroidal axis of the structure is assumed to be a continuous tortuous line in a single plane. CBNTBM uses the finite element method of analysis to analyze the frame-spring system. CBNTBM is intended to be an easy-to-use program incorporating the capabilities required by a diverse group of users.

Coding and Data Format

CBNTBM is written in FORTRAN and is operational on the following systems:

a. WES Honeywell DPS/1.

b. Harris 500 computers which are located at most district Corps offices.

c. Control Data Corporation, Cybernet Computer Service's CDC CYBER systems.

Data can be input either interactively at execute time or from a prepared data file with line numbers. Output may be directed to an output file or come directly back to the terminal.

How to Use CBNTBM

A short description of how to access the program on each of the three systems is provided below. It is assumed that the user knows how to sign on the appropriate system before trying to use CBNTBM. In the example initiation of execution commands below, all user responses are underlined, and each should be followed by a carriage return.

WES Honeywell System

After the user has signed on the system, the two system commands FORT and NEW get the user to the level to execute the program. Next, the user issues the run command

RUN WESLIB/CORPS/XØØ65,R

to initiate execution of the program. The program is then run as described in this user's guide. The data file should be prepared prior to issuing the RUN command. An example initiation of execution is as follows, assuming a data file had previously been prepared:

```
HIS SERIES 600 ON 03/04/81 AT 13.301 CHANNEL 5647
USER ID - ROKACASECON
PASSWORD - XXXXXXXXXXXXXX
SYSTEM? FORT NEW
READY
*RUN WESLIB/CORPS/XØØ65,R
```

CDC, Cybernet System

The log-on procedure is followed by a call to the CORPS procedure file

```
OLD, CORPS/UN=CECELB
```

to access the CORPS Library. The file name of the program is used in the command

```
BEGIN,,CORPS,XØØ65
```

to initiate execution of the program. An example is:

```
S4/01/25 10.32.51  AC2E5DA
EASTERN CYBERNET CENTER SN487 NOS        1.4/531.281/20AD
FAMILY:  KOE
USER NAME:  CEROC2
PASSWORD -
XXXXXXX
TERMINAL:      510,NAMIAF
RECOVER/CHARGE:  CHARGE, CEXXXXX, YYYYYY
/OLD, CORPS/UN=CECELB
/BEGIN,,CORPS/XØØ65
```

Local District Harris Systems

After the user has signed on the system, the command to execute the CORPS program will be

```
*CORPS,XØØ65
```

An example to illustrate the log-on and execution procedure on one Harris 500 is shown below. There may be some differences at some local Corps sites.

```
"ACOE - VICKSBURG"
USER #? NNNNWES WESXXX

** Good Morning   25 Jan 84  9:56:31
VED HARRIS 500
```

*CORPS,XØØ65

How to Use CORPS

The CORPS system contains many other useful programs which may be catalogued from CORPS by use of the LIST command. The execute command for CORPS on the WES system is:

```
RUN WESLIB/CORPS/CORPS,R
ENTER COMMAND (HELP,LIST,BRIEF,MESSAGE,EXECUTE, OR STOP)
*?LIST
```

On the Cybernet system, the commands are:

```
OLD,CORPS/UN=CECELB
BEGIN,,CORPS,CORPS
ENTER COMMAND (HELP,LIST,BRIEF,MESSAGE,EXECUTE, OR STOP)
*?LIST
```

On the Harris local systems, the commands are:

```
*CORPS

ARE YOU USING A PRINTER TERMINAL OR CRT?
ENTER P OR C
C

ENTER COMMAND (BRIEF,EXECUTE,LIST,HELP,STOP)
LIST
```

Unclassified

SECURITY CLASSIFICATION OF THIS PAGE (When Data Entered)

REPORT DOCUMENTATION PAGE		READ INSTRUCTIONS BEFORE COMPLETING FORM
1. REPORT NUMBER Instruction Report K-84-5	2. GOVT ACCESSION NO. AD-A143170	3. RECIPIENT'S CATALOG NUMBER
4. TITLE (and Subtitle) USER'S GUIDE: COMPUTER PROGRAM FOR ANALYSIS OF TWO-DIMENSIONAL BEAM-COLUMNS WITH NONLINEAR SUPPORTS (CBNTBM)		5. TYPE OF REPORT & PERIOD COVERED Final report 6. PERFORMING ORG. REPORT NUMBER
7. AUTHOR(s) William P. Dawkins		8. CONTRACT OR GRANT NUMBER(s) Contract No. DACW39-81-M-0715
9. PERFORMING ORGANIZATION NAME AND ADDRESS William P. Dawkins 2801 Black Oak Drive Stillwater, Okla. 74074		10. PROGRAM ELEMENT, PROJECT, TASK AREA & WORK UNIT NUMBERS
11. CONTROLLING OFFICE NAME AND ADDRESS Office, Chief of Engineers, U. S. Army Washington, D. C. 20314		12. REPORT DATE March 1984 13. NUMBER OF PAGES 72
14. MONITORING AGENCY NAME & ADDRESS(if different from Controlling Office) U. S. Army Engineer Waterways Experiment Station Automatic Data Processing Center P. O. Box 631, Vicksburg, Miss. 39180		15. SECURITY CLASS. (of this report) Unclassified 15a. DECLASSIFICATION/DOWNGRADING SCHEDULE

16. DISTRIBUTION STATEMENT (of this Report)

Approved for public release; distribution unlimited.

17. DISTRIBUTION STATEMENT (of the abstract entered in Block 20, if different from Report)

18. SUPPLEMENTARY NOTES

Available from National Technical Information Service, 5285 Port Royal Road, Springfield, Va. 22161.

19. KEY WORDS (Continue on reverse side if necessary and identify by block number)

20. ABSTRACT (Continue on reverse side if necessary and identify by block number)

This report documents a computer program--CBNTBM--for analysis of a plane frame structure which is an assemblage of beam-column elements with linear and/or nonlinear spring supports. The report:

a. Describes the structural system considered and the mathematical model used for analysis.

b. Presents the force-displacement relationships for the mathematical

(Continued)

DD FORM 1 JAN 73 1473 EDITION OF 1 NOV 65 IS OBSOLETE

Unclassified

SECURITY CLASSIFICATION OF THIS PAGE (When Data Entered)

20. ABSTRACT (Continued).

model and describes the computational procedure used for solution.

c. Describes the computer program.

d. Presents example solutions obtained with the program.

PREFACE

This user's guide documents a computer program called CBNTBM that can be used for analysis of a plane frame structure which is an assemblage of two-dimensional beam-column elements with linear and/or nonlinear spring supports. The work in writing the computer program and the user's guide was accomplished with funds provided to the U. S. Army Engineer Waterways Experiment Station (WES), Vicksburg, Miss., under the Civil Works Research and Development Program of the Office, Chief of Engineers, U. S. Army (OCE), as part of the Structural Engineering Research Program work unit of the Soil-Structure Interaction (SSI) Studies Project.

The computer program and user's guide were written by Dr. William P. Dawkins, P.E., of Stillwater, Okla., under Contract No. DACW39-81-M-0715 with WES.

Dr. N. Radhakrishnan, Special Technical Assistant, Automatic Data Processing (ADP) Center, WES, and SSI Studies Project Manager, coordinated and monitored the work. Messrs. H. Wayne Jones and Reed L. Mosher, Computer-Aided Design Group, provided technical assistance in developing and evaluating the program. Mr. Donald R. Dressler, Structures Division, Civil Works Directorate, was the OCE point of contact.

Commanders and Directors of WES during the development of the program were COL Nelson P. Conover, CE, and COL Tilford C. Creel, CE. Technical Director was Mr. F. R. Brown.

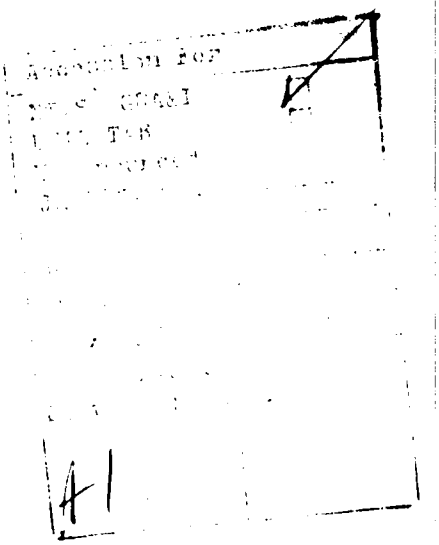

CONTENTS

	Page
PREFACE	1
CONVERSION FACTORS, NON-SI TO SI (METRIC) UNITS OF MEASUREMENT	4
PART I: INTRODUCTION	5
Background	5
Organization of Report	5
Remarks	6
PART II: STRUCTURAL SYSTEM AND FINITE ELEMENT MODEL	7
Global Coordinate System and Nodes	8
Dictated Nodes	8
Intermediate Nodes	8
Node Numbers	9
Element Identification	9
Local Coordinate Systems	9
Displacements	9
Applied Concentrated Loads	10
Fixed Supports	10
Concentrated Linear Springs	10
Concentrated Nonlinear Translational Springs	11
Element Coordinate System	12
Characteristics of Nonlinear Springs	14
PART III: FORCE-DISPLACEMENT RELATIONSHIPS AND SOLUTION PROCEDURE	15
Element Force-Displacement Relationships	15
Solution Procedure	16
Iterations	16
Effect of Node Spacing on Solution	16
PART IV: COMPUTER PROGRAM	22
Input Data	22
Displacement and Load Sign Conventions	22
Distributed Nonlinear Springs	22
Data Generation	23
Node Generation	23
Cross-Section Properties	24
Distributed Loads and Springs	24
Output Data	24
Echoprint of Input Data	25
Node Coordinates and Displacements	26
Element End Forces	26
Reactions at Fixed Supports	26
Forces in Concentrated Linear Springs	26
Forces in Distributed Linear Springs	26
Forces in Concentrated Nonlinear Springs	26
Forces in Distributed Nonlinear Springs	26
Output Sign Conventions	27

	Page
PART V: GUIDE FOR DATA INPUT	28
Source of Input	28
Data Editing	28
Input Data File Generation	28
Data Format	28
Sections of Input	29
Minimum Required Data	29
Units	29
Predefined Data File	30
Input Description	30
Abbreviated Input Guide	39
PART VI: EXAMPLE SOLUTIONS	42
Example 1--Gabled Frame	42
Execution of CBNTBM with Data Entered Interactively	43
Input Data File for Example 1 Created by CBNTBM	48
Example 2--Semicircular Arch	49
Input Data File for Example 2	49
Program Execution for Example 2	51
Example 3--Pile Bent	56
Input Data File for Example 3	58
Program Execution for Example 3	59
Output File for Example 3	61
Example 4--U-Frame Channel Liner	65
Input Data File for Example 4	67
Echoprint of Input Data for Example 4	68
Output for Example 4	70

CONVERSION FACTORS, NON-SI TO SI (METRIC)
UNITS OF MEASUREMENT

Non-SI units of measurement used in this report can be converted to SI (metric) units as follows:

Multiply	By	To Obtain
feet	0.3048	meters
inches	0.0254	meters
kip (force)-feet	0.00135582	newton-meters
kips (1000 lb force)	4.448222	kilonewtons
kips (force) per foot	0.0145939	newtons per meter
kips (force) per inch	0.17512685	newtons per meter
kips (force) per square inch	6.894757	m[illegible]ascals
pound (force)-inches	0.1129848	[illegible] ton-meters
pounds (force)	4.448222	[illegible]tons
pounds (force) per foot	14.5939	[illegible]s per meter
pounds (force) per inch	175.12685	newtons per meter
pounds (force) per square inch	6.894757	kilopascals
square inches	0.00064516	square meters

USER'S GUIDE: COMPUTER PROGRAM FOR ANALYSIS OF TWO-DIMENSIONAL BEAM-COLUMNS WITH NONLINEAR SUPPORTS (CBNTBM)

PART I: INTRODUCTION

Background

1. A beam-column is usually understood to be an initially straight structural member in which axial internal forces amplify the effects produced by lateral loads. A finite element model and a general-purpose computer program for analysis of straight beam-columns--CBEAMC--are described in Dawkins (1982).*

2. This report presents an extension of the beam-column analysis to a special class of plane frame structure in which the frame is composed of an assemblage of beam-column elements. Documentation for a computer program--CBNTBM--employing the technique is provided.**

Organization of Report

3. The remainder of this report is organized as follows:

   a. Part II: Describes the structural system considered and the mathematical model used for analysis.

   b. Part III: Presents the force-displacement relationships for the mathematical model and describes the computational procedure used for solution.

   c. Part IV: Describes the computer program.

   d. Part V: Guide for data input.

   e. Part VI: Provides example solutions obtained with the program.

---

* W. P. Dawkins. 1982. "User's Guide: Computer Program for Analysis of Beam-Column Structures with Nonlinear Supports (CBEAMC)," Instruction Report K-82-6, U. S. Army Engineer Waterways Experiment Station, Vicksburg, Miss.

** CBNTBM is designated X0065 in the Conversationally Oriented Real-Time Program-Generating System (CORPS) library. Three sheets entitled "PROGRAM INFORMATION" have been hand-inserted inside the front cover of this report. They present general information on CBNTBM and describe how it can be accessed. If procedures used to access this and other CORPS programs should change, recipients of this report will be furnished revised versions of the "PROGRAM INFORMATION" sheets.

Remarks

4. CBNTBM has been checked for computational accuracy within reasonable limits. However, there may exist unusual situations which were not anticipated which may cause the program to produce questionable results. It is the responsibility of the user to use good engineering judgment to determine the validity of the results.

PART II: STRUCTURAL SYSTEM AND FINITE ELEMENT MODEL

5. The structure is assumed to be a special class of plane frame structure in which the centroidal axis is a continuous tortuous line in a single plane. Example tortuous line structures are shown in Figure 1. The procedure presented in this report is restricted to those structures in which the

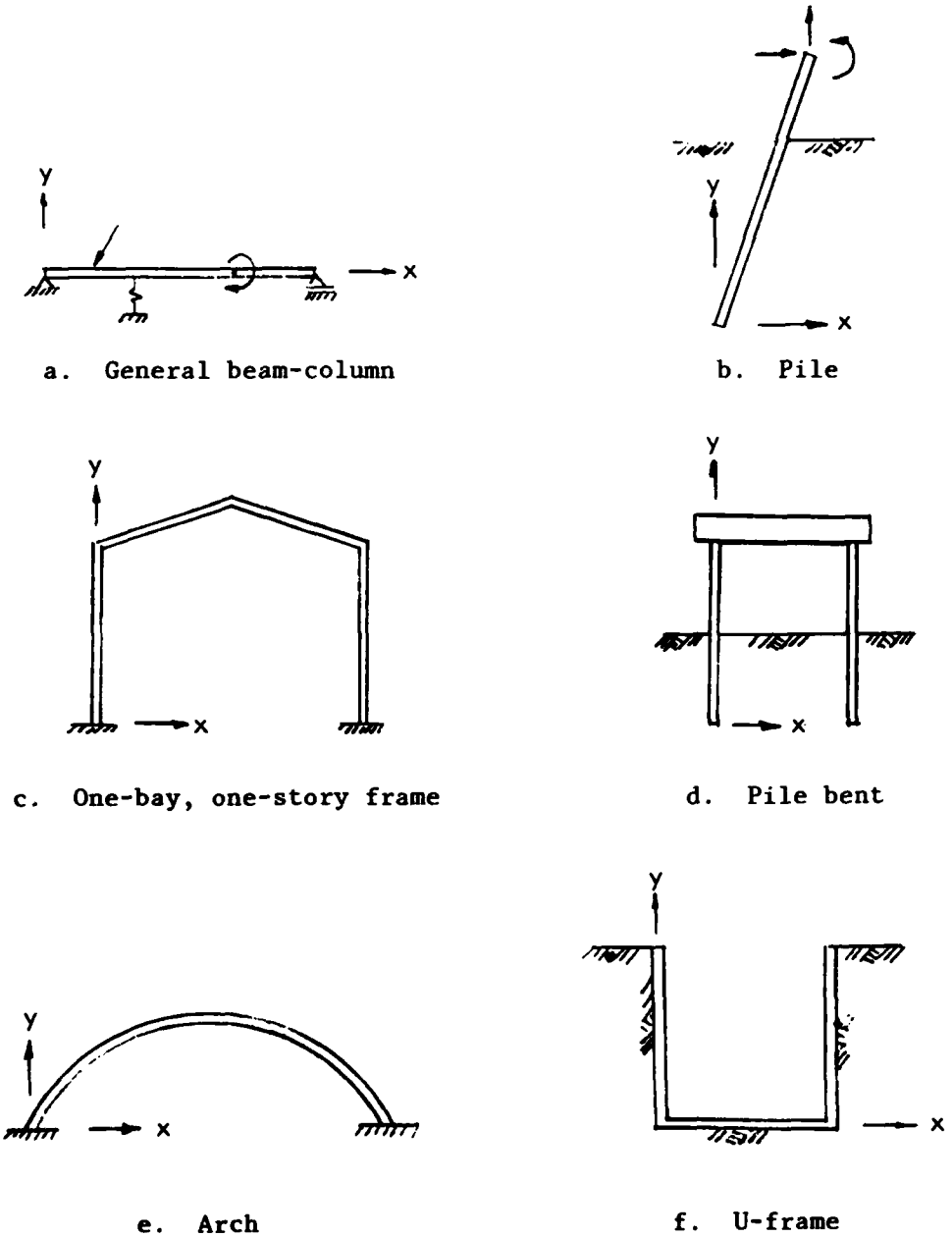

a. General beam-column

b. Pile

c. One-bay, one-story frame

d. Pile bent

e. Arch

f. U-frame

Figure 1. Example tortuous line structures

centroidal axis is composed of a sequence of initially straight segments. Approximate solutions for initially curved structures may be obtained by replacing the curved structure with straight segments which are chords of the original curve.

Global Coordinate System and Nodes

6. Several coordinate systems are required to describe the geometry and to interpret the behavior of the two-dimensional structure. The centroidal axis of the structure is assumed to lie in the x-y plane of a right-handed Cartesian x-y-z coordinate system referred to as the global coordinate system. The origin and orientation of the global system are arbitrary.

7. The geometry of the structure is established by the global x-y coordinates of nodes (joints) on the centroidal axis. Nodes are described as either "dictated" or "interm ate."

Dictated Nodes

8. Dictated nodes are those required to establish the overall geometry of the structure at:

a. Each end of the structure.

b. The juncture of two straight segments of the centroidal axis.

c. Each change in cross-sectional or material properties (E--modulus of elasticity; I--moment of inertia; A--cross-sectional area).

d. The point of application of a concentrated load.

e. The point of application of a fixed support or concentrated spring (linear or nonlinear) support.

f. The beginning and end of a distributed load.

g. The beginning and end of distributed spring (either linear or nonlinear) supports.

Intermediate Nodes

9. Intermediate nodes are those defined between dictated nodes as necessary to improve accuracy of the solution (discussed later) or to provide increased detail of the variation of structural response.

Node Numbers

10. Nodes are identified by integer numbers starting with node 1 at one end of the structure and proceeding sequentially along the centroidal axis. Only the node numbers and global coordinates of the dictated nodes are required as input to the computer program. Global coordinates (and node numbers) for intermediate nodes are generated at equal intervals (along a straight line or circular arc; see Part V, "Guide for Data Input") between successive pairs of dictated nodes.

Element Identification

11. An element is defined as the straight segment of the structure between successive nodes and is identified by the lower of its two terminal node numbers; i.e., element i lies between nodes i and i+1. The structure is thus composed of n nodes (node 1 at one end, node n at the other) and n-1 elements.

Local Coordinate Systems

12. Local coordinate systems are established for convenience in describing behavior or interpreting the response of loads, spring supports, internal forces, and displacements. The local coordinate system associated with each item is described below.

Displacements

13. Displacements of the system are completely defined by global components of the nodal translations u (parallel to the global x axis) and v (parallel to the global y axis), and rotation θ about an axis perpendicular to the x-y plane (see Figure 2).

14. All displacements are assumed to be "small"; i.e., they do not alter the basic geometry of the structure. Rotations θ are small enough to permit the approximation

$\cos \theta = 1$ and $\sin \theta = \theta$.

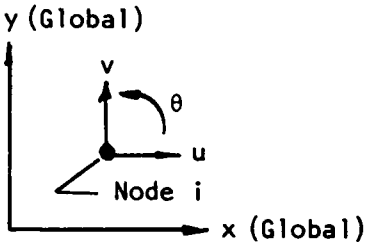

Figure 2. Nodal displacements

Applied Concentrated Loads

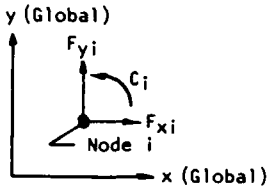

Figure 3. Applied concentrated loads

15. Concentrated loads may be applied to any node. These loads are assumed to be applied as components parallel to the global x and y axes (F_x and F_y, respectively) or as couples C about axes perpendicular to the x-y plane (see Figure 3).

Fixed Supports

16. A fixed support is an external influence which results in a specific value (either zero or nonzero) of one or more of the global components (u , v , θ) of displacement at a node regardless of any other effects.

Concentrated Linear Springs

17. Concentrated linear springs produce forces on the structure which are directly proportional to the displacements of the node to which the springs are attached:

a. A translational spring and its attendant local coordinate system are shown in Figure 4. The local axis extends from

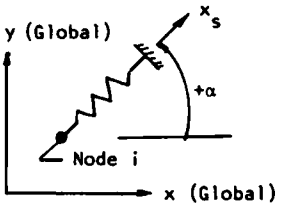

Figure 4. Linear concentrated spring

the attachment node toward the fixed base of the spring making an angle α (positive counterclockwise) with the global x axis. The deformation of the spring may be expressed in terms of the nodal translations as

$$\Delta_s = u_i \cos \alpha + v_i \sin \alpha \qquad (1)$$

The force produced on the node is

$$F_s = k_s \Delta_s \tag{2}$$

where k_s is the spring stiffness and F_s acts on the node parallel to x_s and opposite in sense to Δ_s.

b. A rotational spring (Figure 5) resists rotation of the node.

Figure 5. Linear rotation spring

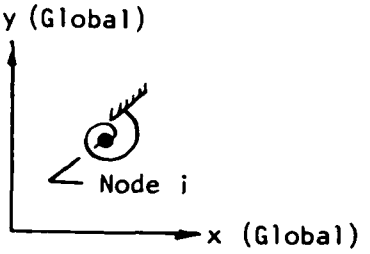

The moment produced on the node by the rotational spring is

$$C_s = R_s \theta_i \tag{3}$$

where R_s is the spring stiffness and C_s acts opposite to the nodal rotation θ_i.

Concentrated Nonlinear Translational Springs

18. A concentrated nonlinear translational spring (Figure 6) produces a force which resists translation of the node to which it is attached. The resisting force is a function of, but not directly proportional to, the translation of the node. The resistance-deformation function of the spring shown schematically in Figure 6b must be provided as input to CBNTBM (Part V).

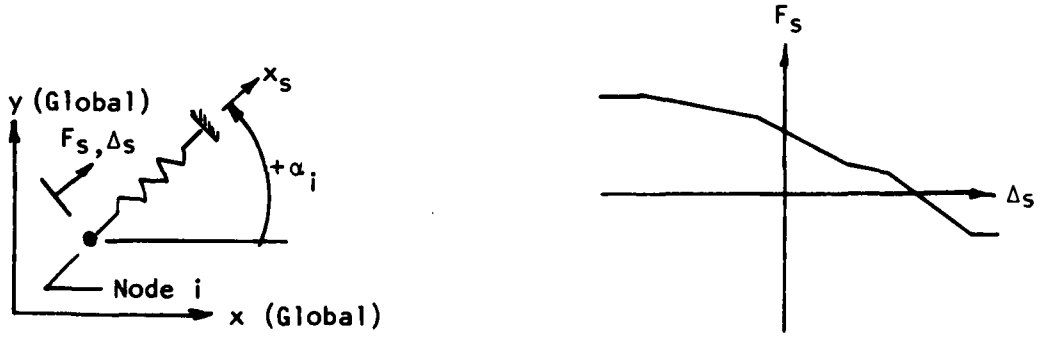

a. Nonlinear concentrated spring b. Force-deformation relationship

Figure 6. Nonlinear spring characteristics

The local coordinate system associated with the nonlinear spring is shown in Figure 6a. The deformation of the spring is

$$\Delta_s = u_i \cos \alpha + v_i \sin \alpha \qquad (4)$$

The resisting force F_s produced by the spring is obtained from the resistance-deformation function. F_s acts parallel to the local x_s axis and opposite in sense to the deformation Δ_s. (Note: Nonlinear rotational springs are not accommodated by the CBNTBM.)

Element Coordinate System

19. Element force-displacement relationships as well as the effects of all distributed loads and distributed springs (either linear or nonlinear) are established in a local coordinate system peculiar to each element. A local coordinate system and typical element are shown in Figures 7 and 8. As stated previously, the element is identified by the lower of its two terminal node numbers. The local x_i axis is positive from node i to node i+1. The local z_i axis is parallel to (and in the same positive sense as) the global z axis. The local y_i axis is established so that the x_i-y_i-z_i system forms a right-handed Cartesian system.

20. The following assumptions are employed in interpreting input data provided to CBNTBM:

a. Distributed loads are described as extending between input pairs of dictated nodes. If the terminal nodes of any element (e.g., element i between nodes i and i+1) are within the specified distribution, the distributed load is interpreted as being parallel to the local axes (either x_i or y_i) for element i, regardless of whether the terminal nodes of the distribution and the terminal nodes of element i fall along a single straight line.

b. Distributed springs are described as extending between input pairs of dictated nodes. If the terminal nodes of any element are within the specified distribution, the distributed spring is interpreted as resisting displacement components parallel to the local axes (x_i or y_i) for element i, regardless of whether the terminal nodes of the distribution and the terminal nodes of element i fall along a single straight line.

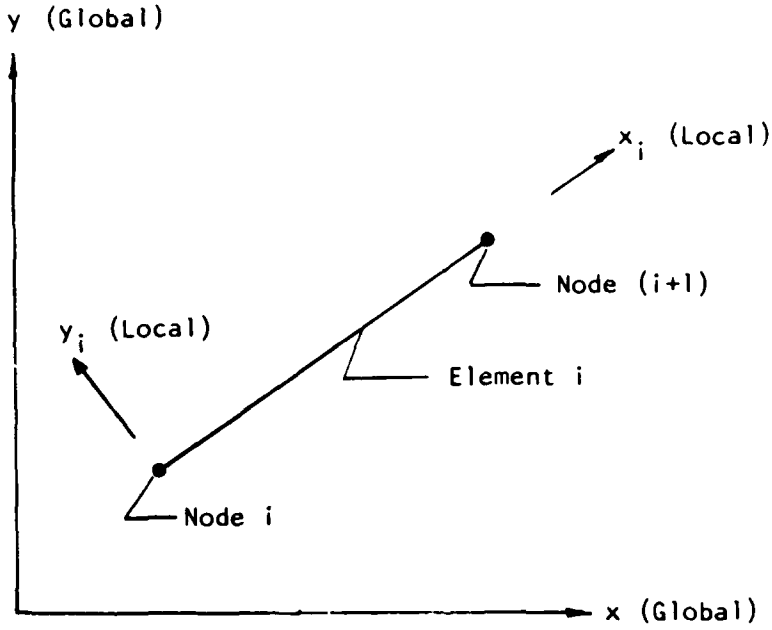

Figure 7. Element local coordinate system

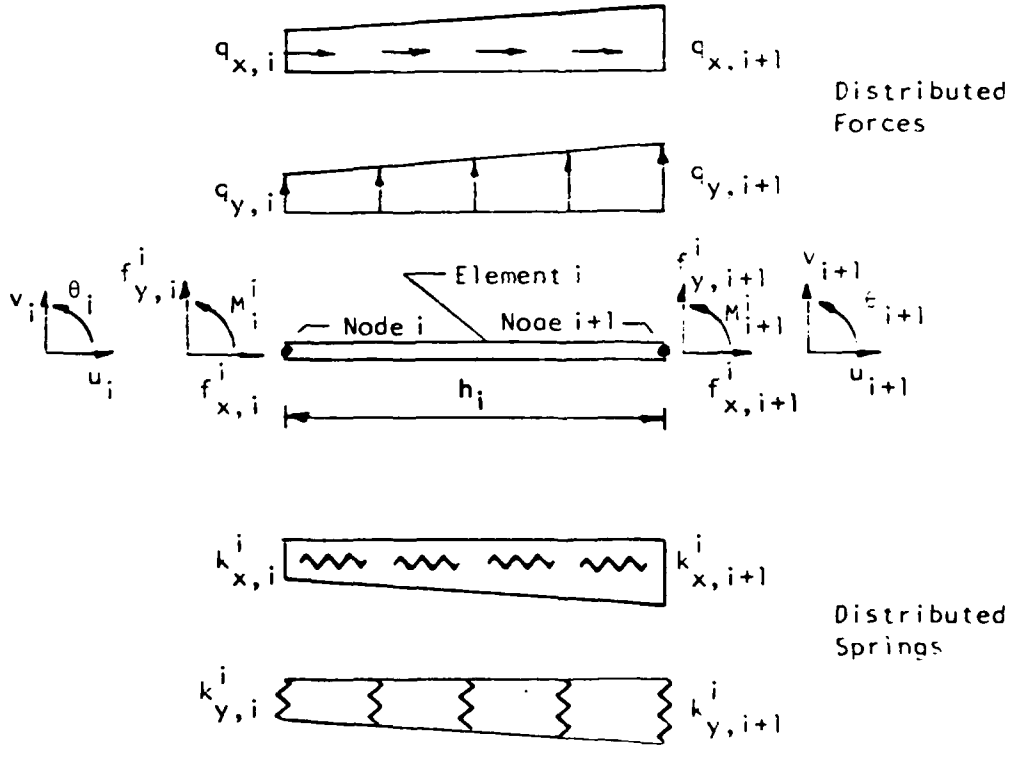

Figure 8. Typical element in local coordinate system

Characteristics of Nonlinear Springs

21. The force-deformation relationship for a nonlinear spring (either concentrated or distributed) is assumed to be provided as a piecewise linear curve, as shown in Figure 9. For any deformaton Δ parallel to the spring

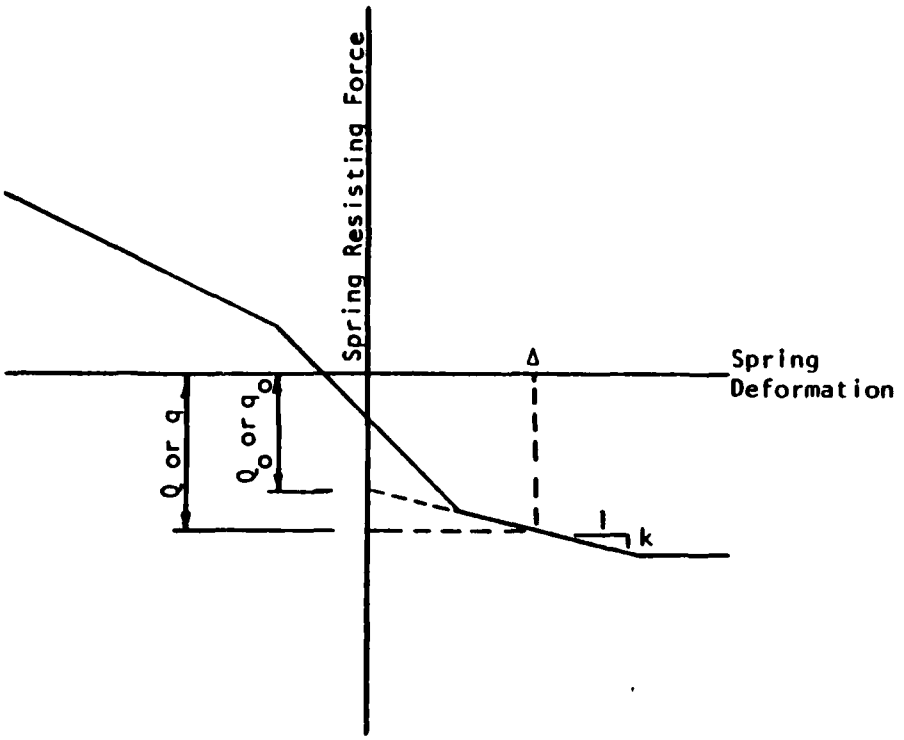

Figure 9. Characteristics of nonlinear springs

line of action, the total resisting force (concentrated or distributed) may be expressed as

$$Q \text{ (or } q) = Q_o \text{ (or } q_o) + k\Delta \tag{5}$$

Thus, although an iterative solution is required, during any iteration a nonlinear spring may be replaced by a combination of a fixed load (Q_o or q_o) and a linear spring with stiffness k .

PART III: FORCE-DISPLACEMENT RELATIONSHIPS AND SOLUTION PROCEDURE

Element Force-Displacement Relationships

22. An element is defined as that portion of the structure between adjacent nodes. For reference in the following paragraphs, an element is identified by the node number at its left end as shown in Figure 7.

23. Each element is characterized by modulus of elasticity E, cross-sectional area A, moment of inertia I, and length h and is subjected to distributed loads and springs as shown in Figure 8.

24. Interaction of internal axial stress resultants with lateral deflections will affect the bending response of the element. When this effect is included, the bending resistance of the element is developed using a constant average axial stress resultant given by

$$P = \frac{AE}{h} (u_{i+1} - u_i) \tag{6}$$

25. The relationship between element end forces and end nodal displacements, obtained by procedures given in standard texts,* is

$$\underset{\sim}{f}^i = \left[\underset{\sim}{S}^i_E + \underset{\sim}{S}^i_k\right] \underset{\sim}{u}^i + \underset{\sim}{f}^i_e \tag{7}$$

where

$$\underset{\sim}{f}^i = \left[\underset{\sim}{f}^i_i \; \underset{\sim}{f}^i_{i+1}\right]^T = \left[f^i_{x,i} \; f^i_{y,i} \; M^i_i \quad f^i_{x,i+1} \; f^i_{y,i+1} \; M^i_{i+1}\right]^T$$

= 6 × 1 vector of element end forces

$\underset{\sim}{S}^i_E$ = 6 × 6 axial and beam bending stiffness matrix including the effects of the axial stress resultant on bending

$\underset{\sim}{S}^i_k$ = 6 × 6 stiffness matrix representing the effects of distributed springs

$$\underset{\sim}{U}^i = \left[\underset{\sim}{U}_i \; \underset{\sim}{U}_{i+1}\right]^T = \left[u_i \; v_i \; \theta_i \quad u_{i+1} \; v_{i+1} \; \theta_{i+1}\right]^T$$

= 6 × 1 vector of end nodal displacements

---

* R. W. Clough and J. Penzien. 1975. Dynamics of Structures, McGraw-Hill, New York.

J. S. Przmieniecki. 1968. Theory of Matrix Structural Analysis, McGraw-Hill, New York.

O. C. Zienkiewicz. 1971. The Finite Element Method in Engineering Science, McGraw-Hill, New York.

$$\underset{\sim}{f}^{i}_{e} = \left[\underset{\sim}{f}^{i}_{e,i} \quad \underset{\sim}{f}^{i}_{e,i+1}\right]^{T} = \left[f^{i}_{ex,i} \; f^{i}_{ey,i} \; M^{i}_{e,i} \; f^{i}_{ex,i+1} \; f^{i}_{ey,i+1} \; M^{i}_{e,i+1}\right]^{T}$$

= 6 × 1 vector of fixed end forces due to distributed loads

26. Coefficients for matrices $\underset{\sim}{S}^{i}_{E}$, $\underset{\sim}{S}^{i}_{k}$, and $\underset{\sim}{f}^{i}_{e}$ are given in Figures 10-12 and Table 1.

Solution Procedure

27. After all local force-displacement relations (elements and concentrated springs) are transformed to the global coordinate system, satisfaction of joint equilibrium results in a system of 3n (for a structure with n nodes) simultaneous equations which may be solved for the nodal displacements. Back substitution of nodal displacements into force-displacement relations allows evaluation of all internal forces.

Iterations

28. Whenever nonlinear spring supports are present and/or the effect of the axial stress resultant on bending is included, an iterative solution of the simultaneous equations is required. The iterative solution is initiated by evaluating axial stress resultants and nonlinear spring stiffnesses for zero displacements. On each succeeding iteration, the solution of the preceding iteration is used for evaluating system properties. The process is continued until the results of two successive iterations differ by an acceptably small amount.

Effect of Node Spacing on Solution

29. The finite element procedure described above produces "exact" solutions for systems possessing the following characteristics:

a. The structure is piecewise prismatic and composed only of straight segments.

b. Only concentrated external loads and linearly varying lateral (local y) loads are present. Or, if the effect of the axial

$$
\underset{\sim}{S}_E^I = \frac{E}{h}
\left[\begin{array}{ccc:ccc}
A & 0 & 0 & -A & 0 & 0 \\
 & a_1 \frac{I}{h^2} & a_2 \frac{I}{h} & 0 & -a_1 \frac{I}{h^2} & a_2 \frac{I}{h} \\
 & & a_3 I & 0 & -a_2 \frac{I}{h} & a_4 I \\
\hdashline
 & & & A & 0 & 0 \\
 & SYM & & & a_1 \frac{I}{h^2} & -a_2 \frac{I}{h} \\
 & & & & & a_3 I
\end{array}\right]
$$

where:
- E = modulus of elasiticity
- A = cross-section area
- I = cross-section moment of inertia
- h = element length
- a_1-a_4 = constants given in Table 1

a. Explicit

$$
\underset{\sim}{S}_E^I = \begin{bmatrix} \underset{\sim}{S}_{E,I,I}^I & \underset{\sim}{S}_{E,I,I+1}^I \\ \underset{\sim}{S}_{E,I+1,I}^I & \underset{\sim}{S}_{E,I+1,I+1}^I \end{bmatrix}
$$

b. Partitioned symbolic

Figure 10. Element axial and beam bending stiffness matrix

$$
S_k^l = \frac{h}{840}
\left[\begin{array}{ccc:ccc}
(210\,k_{x,i} + 70\,k_{x,i+1}) & 0 & 0 & 70(k_{x,i} + k_{x,i+1}) & 0 & 0 \\
 & (240\,k_{y,i} + 72\,k_{y,i+1}) & h(30\,k_{y,i} + 14\,k_{y,i+1}) & 0 & 54(k_{y,i} + k_{y,i+1}) & -h(14\,k_{y,i} + 12\,k_{y,i+1}) \\
 & & h^2(5\,k_{y,i} + 3\,k_{y,i+1}) & 0 & h(12\,k_{y,i} + 14\,k_{y,i+1}) & -3h^2(k_{y,i} + k_{y,i+1}) \\
\hdashline
 & & & (70\,k_{x,i} + 210\,k_{x,i+1}) & 0 & 0 \\
 & \text{SYM} & & & (72\,k_{y,i} + 240\,k_{y,i+1}) & -h(14\,k_{y,i} + 30\,k_{y,i+1}) \\
 & & & & & h^2(3\,k_{y,i} + 5\,k_{y,i+1})
\end{array}\right]
$$

a. Explicit

$$
S_k^l = \begin{bmatrix} S_{k,i,i}^l & S_{k,i,i+1}^l \\ S_{k,i+1,i}^l & S_{k,i+1,i+1}^l \end{bmatrix}
$$

b. Partitioned symbolic

Figure 11. Contribution of distributed springs to element stiffness matrix

$$\underline{f}_e^i = \begin{Bmatrix} f_{ex,i}^i \\ f_{ey,i}^i \\ m_{e,i}^i \\ \hline f_{ex,i+1}^i \\ f_{ey,i+1}^i \\ m_{e,i+1}^i \end{Bmatrix} = \frac{h}{60} \begin{Bmatrix} -(20\, q_{x,i} + 10\, q_{x,i+1}) \\ (b_1\, q_{y,i} + b_2\, q_{y,i+1}) \\ h(b_3\, q_{y,i} + b_4\, q_{y,i+1}) \\ \hline -(10\, q_{x,i} + 20\, q_{y,i+1}) \\ (b_2\, q_{y,i} + b_1\, q_{y,i+1}) \\ -h(b_4\, q_{y,i} + b_3\, q_{y,i+1}) \end{Bmatrix}$$

where b_1, b_2, b_3, b_4 = constants given in Table 1

a. Explicit

$$\underline{f}_e^i = \begin{Bmatrix} \underline{f}_{e,i}^i \\ \underline{f}_{e,i+1}^i \end{Bmatrix}$$

b. Partitioned symbolic

Figure 12. Element fixed end forces due to distributed loads

Table 1

Constants for Element Stiffness Matrix and Fixed End Forces

(P = Axial Internal Stress Resultant)

Coefficient	P = 0	P = Compression	P = Tension
a_1	12	$\phi^5 s/\Delta$	$\phi^5 s/\Delta$
a_2	6	$\phi^4(1 - c)/\Delta$	$-\phi^4(1 - c)/\Delta$
a_3	4	$\phi^3(s - \phi c)/\Delta$	$\phi^3(\phi c - s)/\Delta$
a_4	2	$\phi^3(\phi - s)/\Delta$	$\phi^3(s - \phi)/\Delta$
b_1	-21	$10[-3(4 + \phi^2)(1 - c) + \phi s(6 + 2\phi^2)]/\Delta$	$10[3(4 - \phi^2)(1 - c) + \phi s(6 - 2\phi^2)]/\Delta$
b_2	-9	$10[3(4 - \phi^2)(1 - c) - \phi s(6 - \phi^2)]/\Delta$	$10[-3(4 + \phi^2)(1 - c) - \phi s(6 + \phi^2)]/\Delta$
b_3	-3	$10[9\phi s - \phi^2(1 + 2c) - 12(1 - c)]/\Delta$	$10[9\phi s - \phi^2(1 + 2c) + 12(1 - c)]/\Delta$
b_4	-2	$10[3\phi s - \phi^2(2 + c)]/\Delta$	$10[3\phi s - \phi^2(2 + c)]/\Delta$
Δ	--	$\phi^2(2 - 2c - \phi s)$	$\phi^2(2 - 2c + \phi s)$
ϕ	--	$\sqrt{Ph^2/EI}$	$\sqrt{Ph^2/EI}$
s	--	$\sin \phi$	$\sinh \phi$
c	--	$\cos \phi$	$\cosh \phi$

stress resultant on element bending stiffness is excluded, distributed (local x) loads vary linearly.

c. Only concentrated springs are present.

d. Adjacent elements are approximately equal in length. Adjacent elements having substantially different lengths may result in significant round-off errors in the solution of simultaneous equations.

30. The number of nodes (and elements) used in the finite element model may affect the accuracy of the solution. In general, as the number of nodes (and elements) is increased, the solution tends to converge to the "exact" solution. There is no rule of thumb to provide the necessary number of nodes for acceptable results. It may be necessary to perform several solutions for various numbers of nodes and node spacings to ensure that an adequate solution has been obtained.

PART IV: COMPUTER PROGRAM

31. A computer program implementing the analytical process described above has been written in FORTRAN language for interactive execution. With minor revisions, the program will be operational on any computer employing a 60-bit (15-decimal-digit) word length. For systems using fewer than 15 decimal digits, it may be necessary to perform some arithmetic operations in double-precision.

Input Data

32. Input data may be provided from the user terminal during execution or from a predefined data file. CBNTBM has been written to generate automatically intermediate data values from a minimum of user input data. Details of required user input data are presented in Part V. The processes and assumptions used in converting user input data to intermediate data values are described below.

Displacement and Load Sign Conventions

33. Positive directions for displacements and loads are as follows:

a. Nodal displacements u and v are positive if the node translates in the positive global x and y directions, respectively.

b. Nodal rotation is positive if the node rotates counterclockwise.

c. Concentrated nodal loads F_x and F_y are positive if they act in the positive global x and y directions, respectively. Distributed loads q_x and q_y are positive if they act in the positive element (local) x and y directions, respectively.

Distributed Nonlinear Springs

34. Distributed nonlinear springs produce distributed forces proportional to the translation displacements. The deformation of the spring is equal to and has the same sign as the displacement. The distributed force produced on an element by a distributed nonlinear spring is positive if the force acts in the positive element local x and y coordinate directions.

Distributed spring characteristics are assumed to be described by pairs of resisting force-deformation coordinate values similar to those for concentrated springs.

Data Generation

35. Concentrated applied loads, concentrated springs, and fixed supports occur at the nodes on the structure. All other data (cross-section properties E, A, and I and distributed loads and springs) are distributed over a range of nodes. The user is required to provide the locations (node numbers) at which concentrated effects occur and the terminal values (beginning and ending node numbers) of distributed quantities. These define the "dictated" nodes in the model. The program also provides for defining nodes intermediate to the dictated nodes. The following paragraphs describe the procedures and assumptions used to obtain global coordinates and system characteristics at the intermediate nodes.

Node Generation

36. The user describes the basic geometry of the structure by providing node numbers and global coordinates of the "dictated" nodes beginning with node 1, proceeding in increasing order of node number, and ending with the data for the last node (node n) in the structure. Nodes with numbers between consecutive pairs of "dictated" nodes are the "intermediate" nodes. The user also designates whether the segment of the structure between consecutive dictated nodes is a straight line or a circular arc. Coordinates of the intermediate nodes are generated automatically as follows. (The number of elements in a segment is equal to the difference between the consecutive pairs of input dictated node numbers.)

a. A straight segment is divided into elements of equal length with the length of each element equal to the length of the segment divided by the number of elements in the segment.

b. If a circular arc segment is specified, the global coordinates of the center of the arc are also required as input. Global coordinates of the intermediate nodes are generated around the circular arc at equal spacing. The curved segment is approximated by a polygonal arc composed of straight elements between nodes. The accuracy of this approximation depends on the number of nodes in the arc.

37. Node data may be provided at any location on the structure even though such data are not associated with a "dictated" node. These "voluntary dictated" nodes may be used to control the spacing of intermediate nodes; i.e., element length.

38. Data for some "dictated" nodes may be omitted if the automatic generation of node data described above will result in a node at the required location; e.g., at the beginning and/or end of a distributed load or spring or at the location of a concentrated load, concentrated spring, or fixed support.

Cross-Section Properties

39. Cross-section properties are provided at the terminals of a range of node numbers. The modulus of elasticity E must be constant within the range. Cross-section area A and moment of inertia I are assumed to vary linearly between values provided at the terminals. This linear variation is then approximated by a sequence of prismatic elements with the properties of each element determined as shown in Figure 13. Nonzero values of E , A , and I must be provided (or generated) for every element in the structure. If an element is encompassed by more than one range of input values, the properties calculated for each range are cumulative.

Distributed Loads and Springs

40. Distributed loads and springs are described by values at the terminals of a range of node numbers. Distributed loads and springs are implicitly associated with the local coordinate system for the element on which they act. For example, if a distributed load q_y is specified over the range of nodes j to m in Figure 13, the load will be interpreted as acting perpendicular to each element in the range. A linear variation of effects (loads or springs) between values at the terminals is assumed, and values at nodes within the range are determined as shown in Figure 13.

Output Data

41. Output data may be directed to the user terminal, to a data file,

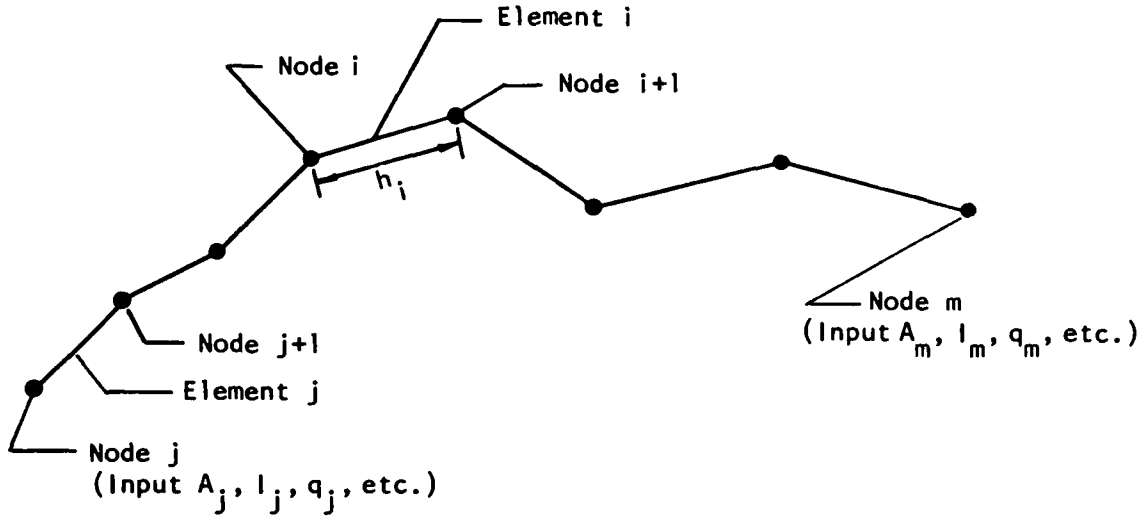

$$A_i = A_j + \frac{h_i/2 + \sum_{k=j}^{i-1} h_k}{\sum_{k=j}^{m-1} h_k} [A_m - A_j]$$

$$I_i = I_j + \frac{h_i/2 + \sum_{k=j}^{i-1} h_k}{\sum_{k=j}^{m-1} h_k} [I_m - I_j]$$

$$q_i = q_j + \frac{\sum_{k=j}^{i-1} h_k}{\sum_{k=j}^{m-1} h_k} [q_m - q_j]$$

Figure 13. Linear interpolation of input data

or to both. The user selects the type and extent of output from the sections described below.

Echoprint of Input Data

42. This section contains a tabulation of all input data currently available to the program. Output of this section is optional.

Node Coordinates and Displacements

43. A tabulation of the global coordinates and global components of the displacements for all nodes in the structure is available. The user may specify a complete tabulation, or select one or more ranges of nodes for output, or omit output of this section.

Element End Forces

44. A tabulation of the forces, in the element coordinate system, on the ends of each element in the structure is available. The user may specify tne extent of output for this section.

Reactions at Fixed Supports

45. A tabulation of the global components of reactions at all fixed supports is available.

Forces in Concentrated Linear Springs

46. A tabulation of spring deformation and force in the local coordinate system is available for all concentrated linear springs.

Forces in Distributed Linear Springs

47. A tabulation of the cumulative force in the distributed linear springs at each end of each element in the element coordinate system is available. The user may specify the extent of output for this section.

Forces in Concentrated Nonlinear Springs

48. A tabulation of the deformation and force in each nonlinear concentrated spring is available.

Forces in Distributed Nonlinear Springs

49. A tabulation of the cumulative force in the distributed nonlinear

springs at each end of each element in the element coordinate system is available. The user may specify the extent of output for this section.

Output Sign Conventions

50. All forces and translational displacements are positive if they act in the associated positive coordinate direction (either global or local). All counterclockwide rotations and moments are positive.

PART V: GUIDE FOR DATA INPUT

Source of Input

51. Input data may be supplied from a predefined data file or from the user terminal during execution. If data are supplied from the user terminal, prompting messages are printed to indicate the amount and character of data to be entered.

Data Editing

52. When all data for a problem have been entered, the user is offered the opportunity to review an echoprint of the currently available input data and to revise any or all sections of the input data before execution is attempted. When data are edited during execution, each section must be entered in its entirety.

Input Data File Generation

53. After data have been entered from the terminal, either initially or after editing, the user may direct the program to write the input data to a permanent file in input data file format.

Data Format

54. All input data (whether supplied from the user terminal or from a file) are read in free-field format:

a. Data items must be separated by one or more blanks (comma separators are not permitted).

b. Integer numbers must be of the form NNNN

c. Real numbers may be of the form

±xxxx, ±xx.xx, or ±xx.xxE+ee.

d. User responses to all requests for control by the program for alphanumeric input may be abbreviated by the first letter of the indicated work response; e.g.,

ENTER 'YES' OR 'NO'--respond Y or N
ENTER 'CONTINUE' or 'END'--respond C or E

Carriage return responses alone will cause abnormal termination of the program.

Sections of Input

55. Input data are divided into the following sections:

a. Heading.

b. Geometry Data.

c. Cross-Section Properties.

d. Applied Loads.

e. Fixed Supports.

f. Linear Spring Data.

g. Nonlinear Spring Data.

h. Termination.

56. When data are entered from the terminal, data sections a through g may be input in any order. When data are entered from a predefined data file, the Heading section (a) must be entered first; other sections (b through g) may be entered in any order.

57. When data are entered from the terminal, the user is cued for Termination. Termination for a data file is discussed later.

Minimum Required Data

58. Data sections a, b, and c are always required. At least one of sections e, f, and g is required. It is the responsibility of the user to ensure that sufficient supports (either fixed or spring supports) are provided to inhibit all rigid body motions of the system; i.e., to ensure a stable structure.

Units

59. The program recognizes the following units:

Inches Feet Pounds Kips

Default is to inches and pounds. Angular units are either degrees or radians as explained below.

60. Each data section may be entered with any combination of units for length and force as specified by the user.

Predefined Data File

61. In addition to the general format requirements given in paragraph 4, above, the following pertain to a predefined data file and to the input data description which follows:

a. Each line must commence with a nonzero, positive line number, denoted LN below.

b. A line of input may require both alphanumeric and numeric data items. Alphanumeric data items are enclosed in single quotes in the following paragraphs.

c. A line of input may require a keyword. The acceptable abbreviation for the keyword is indicated by underlined capital letters; e.g., the acceptable abbreviation for the keywork 'LInear' is 'LI'.

d. Lower case words in single quotes indicate a choice of keywords defined following.

e. Items designated by uppercase letters and numbers without quotes indicate numeric data values. Numeric data values are either real or integer according to standard FORTRAN variable naming conventions.

f. Data items enclosed in brackets [ ] may not be required. Data items enclosed in braces { } indicate special note follows.

g. Input data are divided into the sections discussed in paragraph 5 above. Except for the Heading, each section consists of a header line and one or more data lines. The header line serves the multiple purposes of: indicating the end of the preceding section; identifying the data section to follow; and indicating the units associated with the section.

h. Comment lines may be inserted in the input file by enclosing the line, following the line number, in parentheses. Comment lines are ignored; e.g.,
1234Ø (THIS LINE IS IGNORED).

Input Description

62. Heading--One (1) to four (4) lines

a. Contents

LN 'heading'

b. Definition

'heading' = any alphanumeric information (70 characters maximum)

c. Discussion--a header line must begin with a single quote if the line begins with the first letter of any of the section titles or keywords described below.

63. Geometry Data--Three (3) to twenty-two (22) lines

a. Control--One (1) line

a.1 Contents

LN 'Geometry' ['units']

a.2 Definitions

'Geometry' = section title

'Units' = 'Inches' or 'Feet'

'Inches' assumed if omitted

b. Node Coordinate Data--Two (2) to twenty-one (21) lines

b.1 Contents

LN NODE X Y ['segment type' XC YC]

b.2 Definitions

NODE = node number

X,Y = global coordinates

['segment type'] = 'Straight' or 'Circular'; 'Straight' assumed if omitted

[XC, YC] = global coordinates of center of 'Circular' arc segment

b.3 Discussion

b.3.a Data for NODE = 1 must be provided first.

b.3.b Node numbers on successive lines are assumed to indicate the ends of segments of the structure.

b.3.c Missing nodes are generated at equal intervals between input node numbers along a straight line or along a circular arc according to the 'segment type' data provided.

b.3.d The last node provided (denoted NLAST below) determines the end of the structure.

64. Cross-Section Properties Data--Two (2) to twenty-two (22) lines

a. Control--One (1) line

a.1 Contents

LN 'Properties' ['units']

a.2 Definitions

'Properties' = section title

['units'] = 'Inches' or 'Feet' and 'Pounds' or 'Kips'; 'Inches' and 'Pounds' assumed if omitted

b. Properties Data--One (1) to twenty-one (21) lines

b.1 Contents

LN NODE1 NODE2 E A1 SI1 [A2 SI2]

b.2 Definitions

NODE1, NODE2 = node numbers at beginning and end of range, respectively

E = modulus of elasticity between NODE1 and NODE2

A1 = cross-section area at NODE1

SI1 = cross-section moment of inertia at NODE1

[A2, SI2] = cross-section area and moment of inertia, respectively, at NODE2; assumed equal to values at NODE1 if omitted

b.3 Discussion

b.3.a Properties for elements between NODE1 and NODE2 are determined by linear interpolation from section properties specified by the end values.

b.3.b NODE1 and NODE2 must satisfy:

$$1 \leq \text{NODE1} < \text{NODE2} \leq \text{NLAST}$$

b.3.c Properties for elements specified on more than one line are cumulative.

65. Applied Loads--Zero (0) or two (2) to twenty-two (22) lines; entire section may be omitted

a. Control--One (1) line

a.1 Contents

[LN 'LOads' ['units]]

a.2 Definitions

'LOads' = section title

['units'] = 'Inches' or 'Feet' and 'Pounds' or 'Kips'; 'Inches' and 'Pounds' assumed if omitted

b. Data Lines for Concentrated Loads

b.1 Contents

[LN 'Concentrated' NODE FX FY C]

b.2 Definitions

'Concentrated' = keyword

NODE = node number at concentrated load

FX, FY = global x and y components of concentrated load at NODE

C = applied couple at NODE (positive CCW)

c. Data Lines for Distributed Loads

c.1 Contents

[LN 'Distributed' 'direction' NODE1 Q1 NODE2 [Q2]]

c.2 Definitions

'Distributed' = keyword

'direction' = 'X' if distributed load acts in LOCAL x coordinate direction for elements between N1 and N2

= 'Y' if load acts in LOCAL y coordinate direction

NODE1, NODE2 = node numbers at start and end, respectively, of distribution

Q1 = magnitude of distributed load at NODE1

[Q2] = magnitude of distributed load at NODE 2; assumed equal to Q1 if omitted

d. Discussion

d.1 Data may not be described for nodes/elements beyond the limits of the structure; i.e.,

for concentrated loads: $1 \leq NODE \leq NLAST$

for distributed loads: $1 \leq NODE1 < NODE2 \leq NLAST$

d.2 Magnitudes of distributed loads at nodes between NODE1 and NODE2 are determined by linear interpolation from values at the ends of the distribution.

d.3 Values for nodes/elements specified on more than one line are cumulative.

66. Fixed Supports--Zero (0) or two (2) to eleven (11) lines; entire section may be omitted

a. Control--One (1) line

a.1 Contents

[LN 'Fixed' ['units']]

a.2 Definitions

'Fixed' = keyword

['units'] = 'Inches' or 'Feet'; 'Inches' assumed if omitted

b. Data Lines--One (1) to ten (10) lines

b.1 Contents

[LN NODE XD YD R]

b.2 Definitions

NODE = node number at specified conditions

XD = displacement in X GLOBAL coordinate direction to be enforced at NODE

= 'Free' if node is unrestrained in X direction

YD = displacement in Y GLOBAL coordinate direction

= 'Free' if node is unrestrained in Y direction

R = rotation in radians to be enforced at NODE (positive CCW)

= 'Free' if NODE is free to rotate

b.3 Discussion

b.3.a Data may not be described for nodes beyond the limits of the structure; i.e.,

$1 \leq NODE \leq NLAST$

b.3.b Only one set of specified displacements may be imposed at a single node.

67. Linear Spring Data--Zero (0) or two (2) to twenty-two (22) lines; entire section may be omitted

a. Control--One (1) line

a.1 Contents

[LN 'LInear' ['units']]

a.2 Definitions

'LInear' = section title

['units'] = 'Inches' or 'Feet' and 'Pounds' or 'Kips'; 'Inches' and 'Pounds' assumed if omitted

b. Data Lines for Concentrated Linear Springs

b.1 Contents

[LN 'Concentrated' NODE ANGLE S R]

b.2 Definitions

'Concentrated' = keyword

NODE = node number at spring

ANGLE = angle in degrees between GLOBAL X axis and line of action of translation resisting spring (see Figure 4)

S = stiffness (force/unit-deformation) of translation spring

R = stiffness (moment/radian) of rotation resisting spring

c. Data Lines for Distributed Linear Springs

c.1 Contents

[LN 'Distributed' 'direction' NODE1 S1 NODE2 [S2]]

c.2 Definitions

'Distributed' = keyword

'direction' = 'X' if spring resists displacements in local (element) x direction

= 'Y' if spring resists displacements in local (element) y direction

NODE1, NODE2 = node numbers at start and end, respectively, of distribution

S1 = spring stiffness (force/unit-length/unit-displacement) at start of distribution

[S2] = spring stiffness at end of distribution; assumed equal to S1 if omitted

d. Discussion

d.1 Data may not be described for nodes/elements beyond the limits of the structure; i.e.,

for concentrated springs: $1 \leq NODE \leq NLAST$

for distributed springs: $1 \leq NODE1 < NODE2 \leq NLAST$

d.2 Distributed springs resist displacements in the local (element) coordinate directions.

d.3 Distributed spring stiffnesses at nodes between NODE1 and NODE2 are determined by linear interpolation from values at the ends of the distribution.

d.4 Values for nodes specified on more than one line are cumulative.

68. Nonlinear Spring Data--Zero (0) or four (4) to sixty-four (64) lines; entire section may be omitted

a. Header--One (1) line

a.1 Contents

[LN 'NONlinear' ['units']]

a.2 Definitions

'NONlinear' = section title

['units'] = 'Inches' or 'Feet' and 'Pounds' or 'Kips'; 'Inches' and 'Pounds' assumed if omitted

b. Data Lines for Concentrated Nonlinear Springs--Three (3) lines for each concentrated spring

b.1 Line 1 contents

[LN 'Concentrated' NODE ANGLE SPTS DMUL FMUL]

Line 2 contents

[LN DEF(1) DEF(2) . . . DEF(NPTS)]

Line 3 contents

[LN FORCE(1) FORCE(2) . . . FORCE(NPTS)]

b.2 Definitions

'Concentrated' = *keyword*

NODE = node number at spring

ANGLE = angle (in degrees) between GLOBAL x axis and spring line of action (see Figure 5)

NPTS = number of points on resisting force-deformation curve; minimum of two (2) points required; maximum of eight (8) points permitted

DMUL = scale factor for curve deformation coordination values; must be positive and nonzero

FMUL = scale factor for curve resisting force coordinate values

DEF( ) = curve deformation coordinate value; NPTS values on one line; must proceed sequentially from most negative to most positive

FORCE( ) = curve resisting force coordinate value corresponding to DEF( )

c. Data Lines for Distributed Nonlinear Springs--Minimum of Two (2) groups of three (3) lines for each distribution

c.1.a Group 1, Line 1, Contents

[LN 'Distributed' 'direction' NODE1 NPTS DMUL FMUL]

Group 1, Line 2, Contents

[LN DEF(1) DEF(2) . . . DEF(NPTS)]

Group 1, Line 3, Contents

[LN FORCE(1) FORCE(2) . . . FORCE(NPTS)]

c.1.b Definitions for Group 1

'Distributed' = keyword indicating beginning of distribution

'direction' = 'X' or 'Y' indicating distributed spring resists x or y displacements in local (element) coordinate directions

NODE1 = node at beginning of distribution

NPTS = number of points provided on nonlinear resisting force-displacement curve at NODE 1; minimum of two (2) points required; maximum of eight (8) points permitted

DMUL = scale factor for curve deformation coordinate values; positive, nonzero

FMUL = scale factor for curve resisting force coordinate values

DEF( ) = curve deformation coordinate value; NPTS values on one line; must proceed from most negative to most positive

FORCE( ) = curve resisting distributed force corresponding to DEF( )

c.2.a Group 2, Line 1, Contents

[LN 'control' NODE2 NPTS DMUL FMUL]

Group 2, Line 2, Contents

[LN DEF(1) DEF(2) . . . DEF(NPTS)]

Group 2, Line 3, Contents

[LN FORCE(1) FORCE(2) . . . FORCE(NPTS)]

c.2.b Definitions for Group 2

'control' = 'Continue' or 'End'; 'Continue' indicates distribution continues and another set of Group 2 lines follows; 'End' indicated this is the last curve in this distribution

NODE2 = node for this nonlinear curve

NPTS, DMUL, FMUL, DEF( ), FORCE( ) as in Group 1

d. Discussion

d.1 Final deformation and resisting force curve coordinates are products DMUL·DEF( ) and FMUL·FORCE( ), respectively.

d.2 Resisting force-deformation curve must be single-valued at every point.

d.3 Resisting force-deformation curve is assumed to vary linearly between input points.

d.4 Resisting force is assumed to be constant at first or last value provided on curve for deformations beyond the range of deformation coordinates provided

d.5 Several concentrated nonlinear springs may be attached at a single node.

d.6 Characteristics of distributed nonlinear springs at intermediate nodes on a distribution are obtained by linear interpolation between adjacent curves.

d.7 Overlapping distributions result in cumulative effects at nodes in the overlap.

d.8 Data may not be specified for nodes/elements beyond the limits of the structure; i.e.,

for concentrated springs: $1 \leq NODE \leq NLAST$

for distributed springs: $1 \leq NODE1 < NODE2 \leq NLAST$

69. Termination--One (1) line

a. Contents

LN 'FINish'

b. Definition

'FINish' = keyword indicating end of input data for a problem. Initiates data checking and solution

70. Data items enclosed in brackets [ ] may be omitted. Braces { } enclosing data lists indicate choose one; arrow (→) indicates default if item is omitted.

71. Heading--One (1) to four (4) lines

LN 'heading'

[LN 'heading']

[LN 'heading']

[LN 'heading']

72. Geometry Data--Three (3) to twenty-two (22) lines

a. Control--One (1) line

LN 'Geometry' [{→'Inches' / 'Feet}] [{→'Pounds' / 'Kips'}]

b. Data Lines--One (1) to twenty-one (21) lines

LN NODE X Y [{→'Straight' / 'Circular' XC YC}]

73. Cross-Section Properties--Two (2) to twenty-two (22) lines

a. Control--One (1) line

LN 'Properties [{→'Inches' / 'Feet'}] [{→'Pounds' / 'Kips'}]

b. Data Lines--One (1) to twenty-two (22) lines

LN NODE1 NODE2 E A1 SI1 [A2 SI2]

74. Applied Loads--Zero (0) or two (2) to twenty-two (22) lines

a. Control--One (1) line

[LN 'LOads' [{→'Inches' / 'Feet'}] [{→'Pounds' / 'Kips'}]]

b. Data lines for Concentrated Loads--One (1) line for each loaded node

[LN 'Concentrated' NODE FX FY C]

c. Data Lined for Distributed Loads--One (1) line for each distribution

[LN 'Distributed' NODE1 Q1 NODE2 [Q2]]

75. Fixed Supports--Zero (0) or two (2) to eleven (11) lines

a. Control--One (1) line

[LN 'Fixed' [{→'Inches' / 'Feet'}] [{→'Pounds' / 'Kips'}]]

b. Data Lines--One (1) line for each supported node

[LN NODE XD YD R]

76. Linear Spring Data--Zero (0) or two (2) to twenty-two (22) lines

a. Control--One line

$$\left[\text{LN} \quad \text{'LInear'} \quad \left[\left\{\begin{matrix}\rightarrow\text{'Inches'}\\ \text{'Feet'}\end{matrix}\right\} \quad \left\{\begin{matrix}\rightarrow\text{'Pounds'}\\ \text{'Kips'}\end{matrix}\right\}\right]\right]$$

b. Data Lines for Concentrated Linear Springs--One (1) line for each spring

[LN 'Concentrated' NODE ANGLE S R]

c. Data Lines for Distributed Linear Springs--One (1) line for each distribution

$$\left[\text{LN} \quad \text{'Distributed'} \quad \left\{\begin{matrix}\text{'X'}\\ \text{'Y'}\end{matrix}\right\} \quad \text{NODE1} \quad \text{S1} \quad \text{NODE2} \quad [\text{S2}]\right]$$

77. Nonlinear Spring Data--Zero (0) or four (4) to sixty-four (64) lines

a. Control--One (1) line

$$\left[\text{LN} \quad \text{'NONlinear'} \quad \left\{\begin{matrix}\rightarrow\text{'Inches'}\\ \text{'Feet'}\end{matrix}\right\} \quad \left\{\begin{matrix}\rightarrow\text{'Pounds'}\\ \text{'Kips'}\end{matrix}\right\}\right]$$

b. Data Lines for Concentrated Nonlinear Springs--Three (3) lines for each spring

Line 1:

[LN 'Concentrated' NODE ANGLE NPTS DMUL FMUL]

Line 2:

[LN DEF(1) DEF(2) . . . DEF(NPTS)]

Line 3:

[LN FORCE(1) FORCE(2) . . . FORCE(NPTS)]

c. Data Lines for Distributed Nonlinear Springs--Minimum of two (2) groups of three (3) lines for each distribution

Group 1, Line 1:

$$\left[\text{LN} \quad \text{'Distributed'} \quad \left\{\begin{matrix}\text{'X'}\\ \text{'Y'}\end{matrix}\right\} \quad \text{NODE1} \quad \text{NPTS} \quad \text{DMUL} \quad \text{FMUL}\right]$$

Group 1, Line 2:

[LN DEF(1) DEF(2) . . . DEF(NPTS)]

Group 1, Line 3:

[LN FORCE(1) FORCE(2) . . . FORCE(NPTS)]

Group 2, Line 1:

[LN $\left\{\begin{matrix}\text{'Continue'} \\ \text{'End'}\end{matrix}\right\}$ NODE2 NPTS DMUL FMUL]

Group 2, Line 3:

[LN FORCE(1) FORCE(2) . . . FORCE(NPTS)]

78. Termination

LN 'FINish'

PART VI: EXAMPLE SOLUTIONS

79. The solutions presented below are intended only to illustrate the operation of CBNTBM and are not to be construed as recommendations for application of the program.

Example 1--Gabled Frame

80. The structure, loading, and system properties are shown in Figure 14. Only nodes at the supports and corners of the frame (i.e., nodes

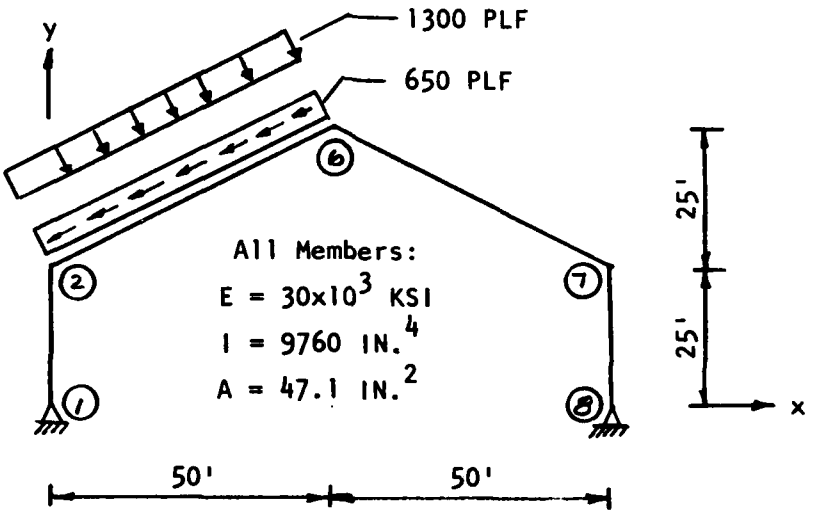

Figure 14. Example 1--gabled frame

1, 2, 6, 7, and 8) are required to define the structural geometry. Additional nodes along the loaded member were used to provide more detail of the variation of internal forces in this region.

81. Data were entered during execution from the terminal as shown on pages 43 and 44. An echoprint of the input data is shown on page 45, and a listing of the input data file generated by the program is given on page 48.

82. Output data were printed to the terminal as shown on pages 46 and 47. There is no approximation involved in this solution, and the results are identical with those obtained by other, closed-form solutions.

83. The program concludes a successful solution with the normal termination message shown on page 47. Any abnormal termination prior to this message may result in loss of data files generated by the program.

Execution of CBNTBM with Data Entered Interactively

```
     PROGRAM CBNTBM - ANALYSIS OF 2D BEAM-COLUMNS WITH NONLINEAR SUPPORTS
     DATE: 02/15/83                                          TIME: 08:34:43
     ARE INPUT DATA TO BE READ FROM TERMINAL OR FILE?
     ENTER 'TERMINAL' OR 'FILE'
I>T
     INPUT DATA SECTIONS AND STATUS

           SECTION                                    DATA
            NUMBER        SECTION CONTENTS          AVAILABLE      ACTIVE UNITS
              1..........HEADING.....................NO
              2..........GEOMETRY DATA...............NO  ......INCHES
              3..........SECTION PROPERTIES..........NO  ......INCHES  POUNDS
              4..........LOADS.......................NO  ......INCHES  POUNDS
              5..........FIXED SUPPORTS..............NO  ......INCHES
              6..........LINEAR SPRINGS..............NO  ......INCHES  POUNDS
              7..........NONLINEAR SPRINGS...........NO  ......INCHES  POUNDS
     ENTER SECTION NUMBER (1 TO 7) FOR DATA TO BE INPUT
     ENTER 'FINISHED' AFTER ALL DATA SECTIONS HAVE BEEN INPUT
     ENTER 'STATUS' TO OBTAIN ABOVE STATUS TABLE
I>1
     ENTER NUMBER OF HEADING LINES (1 TO 4)
I>1
     ENTER HEADING LINE  1 (72 CHARACTERS MAXIMUM)
I>EXAMPLE 1  -  GABLED FRAME
     ENTER SECTION NUMBER (1 TO 7) FOR DATA TO BE INPUT
I>2
     GEOMETRY DATA -- ENTER DATA UNITS
     'INCHES' OR 'FEET' OR 'DEFAULT'
I>F
     ENTER GEOMETRY DATA ONE LINE AT A TIME
     ENTER 'END' IF FINISHED WITH THIS SECTION
          NODE       NODE COORDINATES          SEGMENT TYPE     CENTER COORDINATES
           NO.          X         Y            ('S' OR 'C')        X         Y
                      (FT)      (FT)                              (FT)      (FT)
I>1 0 0
I>2 0 25
I>6 50 50
I>7 100 25
I>8 100 0
I>END
```

(Continued)

Execution of CBNTBM with Data Entered Interactively (Continued)

```
     ENTER SECTION NUMBER (1 TO 7) FOR DATA TO BE INPUT
I>3
     SECTION PROPERTIES -- ENTER DATA UNITS
     'INCHES' OR 'FEET' AND 'POUNDS' OR 'KIPS', OR 'DEFAULT'
I>D
     ENTER SECTION PROPERTIES ONE LINE AT A TIME
     ENTER 'END' IF FINISHED WITH THIS SECTION
                                        <----------SECTION PROPERTIES--------
     NODE NUMBER       MODULUS OF      <----START------>        <----STOP-----
    START    STOP      ELASTICITY      AREA      INERTIA       AREA      INERTIA
                          (PSI)        (SQIN)     (IN**4)      (SQIN)     (IN**4)
I>1 S 30.E6 47.1 9760
I>END
     ENTER SECTION NUMBER (1 TO 7) FOR DATA TO BE INPUT
I>4
     LOAD DATA -- ENTER DATA UNITS
     'INCHES' OR 'FEET' AND 'POUNDS' OR 'KIPS', OR 'DEFAULT'
I>F P
     ENTER LOAD TYPE -- 'CONCENTRATED' OR 'DISTRIBUTED'
     ENTER 'END' IF FINISHED WITH THIS SECTION
I>D
     ENTER DISTRIBUTED LOAD DATA ONE LINE AT A TIME
     ENTER 'END' WHEN FINISHED WITH DISTRIBUTED LOADS
          LOAD            <-----START------>          <-------STOP------>
         DIRECT           NODE          LOAD          NODE          LOAD
          (X,Y)                         (P/F)                       (P/F)
I>X 2 -650 6
I>Y 2 -1300 6
I>END
     ENTER LOAD TYPE -- 'CONCENTRATED' OR 'DISTRIBUTED'
     ENTER 'END' IF FINISHED WITH THIS SECTION
I>END
     ENTER SECTION NUMBER (1 TO 7) FOR DATA TO BE INPUT
I>5
     FIXED SUPPORT DATA -- ENTER DATA UNITS
     'INCHES' OR 'FEET' OR 'DEFAULT'
I>D
     ENTER FIXED SUPPORT DATA ONE LINE AT A TIME
     ENTER 'END' IF FINISHED WITH THIS SECTION
                                   SPECIFIED DISPLACEMENTS
          SUPPORT                (ENTER 'FREE' IF UNSPECIFIED)
          NODE NO.              X-DISP       Y-DISP     ROTATION
                                 (IN)         (IN)       (RAD)
I>1 0 0 F
I>8 0 0 F
I>END
     ENTER SECTION NUMBER (1 TO 7) FOR DATA TO BE INPUT
I>F
     INPUT COMPLETE
     DO YOU WANT INPUT DATA ECHOPRINTED TO YOUR
     TERMINAL, TO A FILE, TO BOTH, OR NEITHER?
     ENTER 'TERMINAL', 'FILE', 'BOTH', OR 'NEITHER'
I>T
```

(Continued)

Execution of CBNTBM with Data Entered Interactively (Continued)

```
PROGRAM CBNTBM - ANALYSIS OF 2D BEAM-COLUMNS WITH NONLINEAR SUPPORTS
DATE: 02/15/83                                          TIME: 08:38:22

I.--INPUT DATA

1.--HEADING

EXAMPLE 1  -  GABLED FRAME


2.--GEOMETRY DATA
     NODE            NODE COORDINATES          SEGMENT     CENTER COORDINATES
      NO.              X            Y            TYPE          X            Y
                      (FT)         (FT)                       (FT)         (FT)
        1             0.00         0.00       STRAIGHT
        2             0.00        25.00       STRAIGHT
        6            50.00        50.00       STRAIGHT
        7           100.00        25.00       STRAIGHT
        8           100.00         0.00


3.--SECTION PROPERTIES
                                  <---------SECTION PROPERTIES--------->
 NODE NUMBER       MODULUS OF     <----START-- -->       <-----STOP----->
START    STOP      ELASTICITY     AREA      INERTIA      AREA      INERTIA
                      (PSI)      (SQIN)     (IN**4)     (SQIN)     (IN**4)
   1       8       3.00E+07       47.10     9760.00      47.10     9760.00


4.--LOAD DATA

  4.A.--CONCENTRATED LOADS
        NONE


  4.B.--DISTRIBUTED LOADS
          LOAD          <-----START----->        <------STOP----->
         DIRECT         NODE          LOAD       NODE          LOAD
                         NO.         (P/FT)       NO.         (P/FT)
            X             2        -650.00         6        -650.00
            Y             2       -1300.00         6       -1300.00


5.--FIXED SUPPORT DATA
     SUPPORT                  SPECIFIED DISPLACEMENTS
       NODE              X-DISP.       Y-DISP.     ROTATION
        NO.               (IN)          (IN)        (RAD)
          1               0.00          0.00         FREE
          8               0.00          0.00         FREE


6.--LINEAR SPRING DATA
     NONE


7.--NONLINEAR SPRING DATA
     NONE
```

(Continued)

Execution of CBNTBM with Data Entered Interactively (Continued)

```
     DO YOU WANT TO EDIT INPUT DATA?  ENTER 'YES' OR 'NO'
I>N
     DO YOU WANT INPUT DATA SAVED IN A FILE?  ENTER 'YES' OR 'NO'
I>Y
     ENTER FILE NAME FOR SAVING INPUT DATA (6 CHARACTERS MAXIMUM)
I>CBNT1
     DO YOU WANT TO CONTINUE SOLUTION?  ENTER 'YES' OR 'NO'
I>Y
     DO YOU WANT AXIAL FORCE EFFECTS ON BENDING STIFFNESS INCLUDED
     IN THE SOLUTION?  ENTER 'YES' OR 'NO'
I>N


     SOLUTION COMPLETE
     DO YOU WANT RESULTS WRITTEN TO YOUR TERMINAL, TO A FILE, OR BOTH?
     ENTER 'TERMINAL', 'FILE ', OR 'BOTH'
I>T
     FOLLOWING OUTPUT DATA ARE AVAILABLE

           SECTION
            NUMBER        SECTION CONTENTS
              1.........NODE COORDINATES AND DISPLACEMENTS
              2.........ELEMENT END FORCES
              3.........REACTIONS AT FIXED SUPPORTS
     COMPLETE OUTPUT CONTAINS APPROXIMATELY    32 LINES.
     OUTPUT CONTROL
     ENTER 'ALL', 'SELECTIVE', 'FINISHED', OR 'HELP'.
I>A
     ENTER DESIRED OUTPUT UNITS.
     'INCHES' OR 'FEET  AND 'POUNDS' OR  KIPS', OR 'DEFAULT'
I>D
```

(Continued)

Execution of CBNTBM with Data Entered Interactively (Concluded)

```
PROGRAM CBNTBM - ANALYSIS OF 2D BEAM-COLUMNS WITH NONLINEAR SUPPORTS
DATE: 02/15/83                                              TIME: 08:40:13

  HEADING
  EXAMPLE 1  -  GABLED FRAME


  NODE COORDINATES AND DISPLACEMENTS IN GLOBAL COORDINATE SYSTEM
 NODE          NODE COORDINATES        <-------NODE DISPLACEMENTS--------
 NO.          X (IN)     Y (IN)          X (IN)       Y (IN)     ROT (RAD)
   1            0.00       0.00        0.           0.          4.385E-05
   2            0.00     300.00        2.590E-01   -1.294E-02  -2.678E-03
   3          150.00     375.00        5.194E-01   -5.439E-01  -3.774E-03
   4          300.00     450.00        7.496E-01   -1.012E+00  -2.141E-03
   5          450.00     525.00        8.106E-01   -1.140E+00   4.770E-04
   6          600.00     600.00        6.937E-01   -9.089E-01   2.334E-03
   7         1200.00     300.00        1.133E+00   -4.313E-03  -1.962E-03
   8         1200.00       0.00        0.           0.         -4.683E-03


  ELEMENT END FORCES IN ELEMENT COORDINATE SYSTEM
      <------------LEFT END------------>  <-----------RIGHT END------------>
EL.       X-FORCE      Y-FORCE       MOMENT      X-FORCE      Y-FORCE       MOMENT
NO.         (P)          (P)         (P-IN)        (P)          (P)         (P-IN)
  1     6.094E+04   -1.771E+04   0.           -6.094E+04   1.771E+04   -5.312E+06
  2     4.309E+04    4.658E+04   5.312E+06    -3.401E+04  -2.842E+04    9.766E+05
  3     3.401E+04    2.842E+04  -9.766E+05    -2.492E+04  -1.025E+04    4.219E+06
  4     2.492E+04    1.025E+04  -4.219E+06    -1.584E+04   7.919E+03    4.414E+06
  5     1.584E+04   -7.919E+03  -4.414E+06    -6.755E+03   2.609E+04    1.563E+06
  6     2.492E+04   -1.025E+04  -1.563E+06    -2.492E+04   1.025E+04   -5.312E+06
  7     2.031E+04    1.771E+04   5.312E+06    -2.031E+04  -1.771E+04   0.


  REACTIONS AT FIXED SUPPORTS IN GLOBAL COORDINATE SYSTEM
   NODE        X-REACT      Y-REACT    MOM-REACT
   NO.           (P)          (P)        (P-IN)
    1       1.771E+04    6.094E+04   0.
    8      -1.771E+04    2.031E+04   0.
  DO YOU WANT OUTPUT WITH DIFFERENT UNITS?
  ENTER 'YES' OR 'NO'.
I>N
  OUTPUT COMPLETE
  DO YOU WANT TO EDIT INPUT DATA FOR THE PROBLEM
  JUST COMPLETED?  ENTER 'YES' OR 'NO'
I>N
  DO YOU WANT TO MAKE ANOTHER 'CBNTBM' RUN?  ENTER 'YES' OR 'NO'
I>N
  ********** NORMAL TERMINATION **********
```

Input Data File for Example 1 Created by CBNTBM

```
1000   EXAMPLE 1  -  GABLED FRAME
1010   GEOMETRY     F
1020    1    0.           0.
1030    2    0.           2.500E+01
1040    6    5.000E+01    5.000E+01
1050    7    1.000E+02    2.500E+01
1060    8    1.000E+02    0.
1070   PROPERTIES     I  F
1080    1     8   3.000E+07      47.10    9760.00      47.10    9760.00
1090   LOADS      F  F
1100     D  X          2   -650.00          6   -650.00
1110     D  Y          2  -1300.00          6  -1300.00
1120   FIXED      I
1130              1       0.00       0.00       FREE
1140              8       0.00       0.00       FREE
1150     FINISHED
```

Example 2--Semicircular Arch

84. The semicircular arch shown in Figure 15a is replaced by an assemblage of straight elements as shown in Figure 15b. The accuracy of the analysis using the replacement system depends on the number of nodes (and elements) used in the model. The effect of the number of nodes on the solution is shown in Figure 15c for the moment reaction at the left support (the maximum bending moment for this structure).

85. Input data for a 41-node model were entered from a predefined data file as indicated below. An echoprint of input data is shown on page 51.

86. Results were output selectively to the terminal as shown on pages 52-55.

Input Data File for Example 2

```
1000  EXAMPLE 2 - SEMICIRCULAR ARCH
1010  41 NODE SOLUTION
1020  GEOMETRY F
1030  1  -15.0  0.0  CURVE  0.0  0.0
1040  21  0.0  15.0 CURVE  0.0  0.0
1050  41 15.0  0.0
1060  PROPERTIES  I  K
1070  1  41  2000.0  100.0  1000.0  100.0  1000.0
1080  LOADS  F  F
1090  D  Y   1  -100.0   21  -100.0
1100  FIXED   I
1110  1  0.0  0.0  0.0
1120  41  0.0  0.0  0.0
1130  FINISHED
```

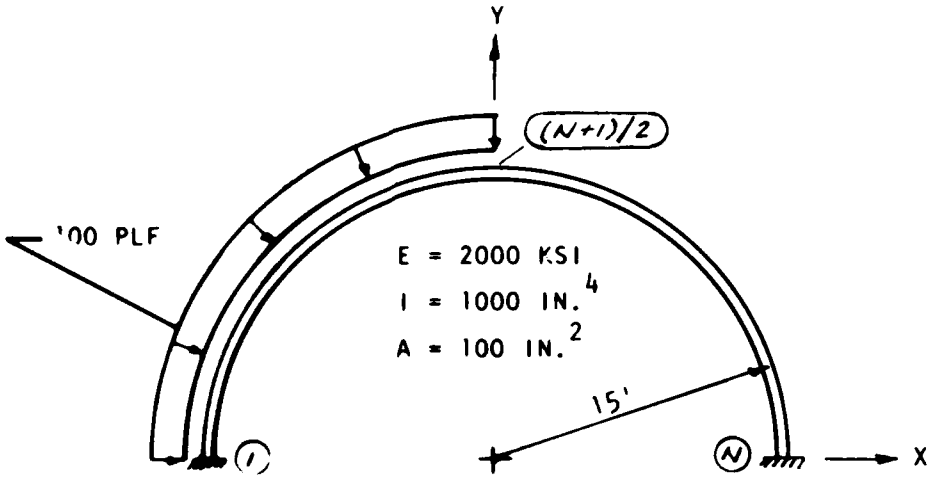

a. Structure

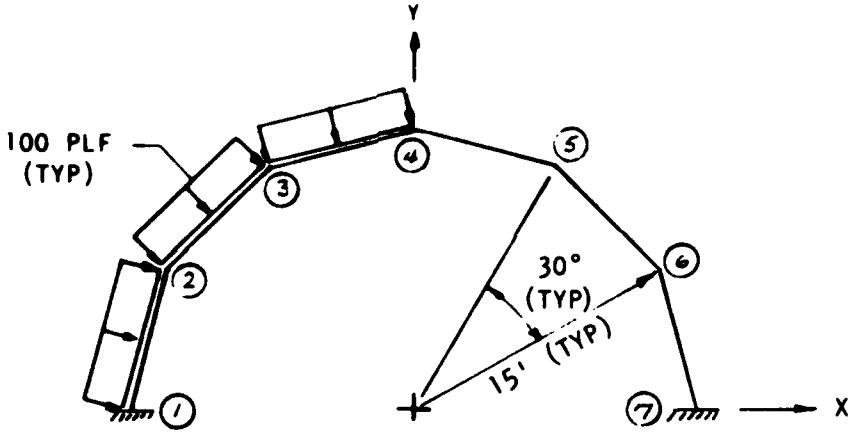

b. 7-node model

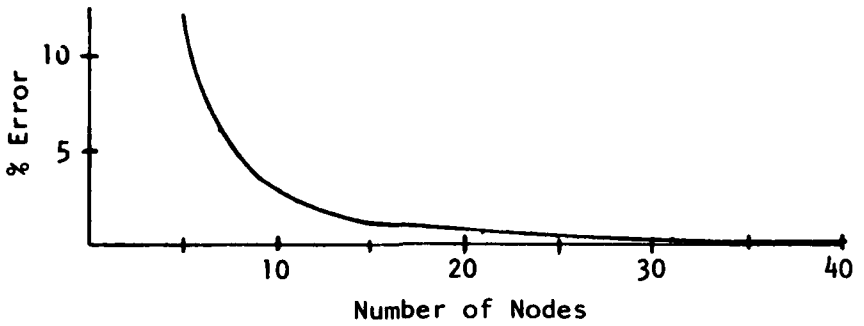

c. Error in moment reaction at node 1

Figure 15. Example 2--semicircular arch

Program Execution for Example 2

```
     PROGRAM CBNTBM - ANALYSIS OF 2D BEAM-COLUMNS WITH NONLINEAR SUPPORTS
     DATE: 02/15/83                                          TIME: 08:48:35
     ARE INPUT DATA TO BE READ FROM TERMINAL OR FILE?
     ENTER 'TERMINAL' OR 'FILE'
I>F
     ENTER INPUT FILE NAME (6 CHARACTERS MAXIMUM)
I>CBNT2
     INPUT COMPLETE
     DO YOU WANT INPUT DATA ECHOPRINTED TO YOUR
     TERMINAL, TO A FILE, TO BOTH, OR NEITHER?
     ENTER 'TERMINAL', 'FILE', 'BOTH', OR 'NEITHER'
I>T
```

```
 PROGRAM CBNTBM - ANALYSIS OF 2D BEAM-COLUMNS WITH NONLINEAR SUPPORTS
 DATE: 02/15/83                                          TIME: 08:48:59

 I.--INPUT DATA

 1.--HEADING

 EXAMPLE 2 - SEMICIRCULAR ARCH
 41 NODE SOLUTION
```

2.--GEOMETRY DATA

NODE NO.	NODE COORDINATES X (FT)	NODE COORDINATES Y (FT)	SEGMENT TYPE	CENTER COORDINATES X (FT)	CENTER COORDINATES Y (FT)
1	-15.00	0.00	CURVE	0.00	0.00
21	0.00	15.00	CURVE	0.00	0.00
41	15.00	0.00			

3.--SECTION PROPERTIES

NODE NUMBER START	NODE NUMBER STOP	MODULUS OF ELASTICITY (KSI)	SECTION PROPERTIES <START> AREA (SQIN)	SECTION PROPERTIES <START> INERTIA (IN**4)	SECTION PROPERTIES <STOP> AREA (SQIN)	SECTION PROPERTIES <STOP> INERTIA (IN**4)
1	41	2.00E+03	100.00	1000.00	100.00	1000.00

4.--LOAD DATA

4.A.--CONCENTRATED LOADS

NONE

4.B.--DISTRIBUTED LOADS

LOAD DIRECT	START NODE NO.	START LOAD (P/FT)	STOP NODE NO.	STOP LOAD (P/FT)
Y	1	-100.00	21	-100.00

5.--FIXED SUPPORT DATA

SUPPORT NODE NO.	SPECIFIED DISPLACEMENTS X-DISP. (IN)	Y-DISP. (IN)	ROTATION (RAD)
1	0.00	0.00	0.00
41	0.00	0.00	0.00

6.--LINEAR SPRING DATA

NONE

7.--NONLINEAR SPRING DATA

NONE

Program Execution for Example 2 (Continued)

```
     DO YOU WANT TO EDIT INPUT DATA?  ENTER 'YES' OR 'NO'
I>N
     DO YOU WANT TO CONTINUE SOLUTION?  ENTER 'YES' OR 'NO'
I>Y
     DO YOU WANT AXIAL FORCE EFFECTS ON BENDING STIFFNESS INCLUDED
     IN THE SOLUTION?  ENTER 'YES' OR 'NO'
I>N


     SOLUTION COMPLETE
     DO YOU WANT RESULTS WRITTEN TO YOUR TERMINAL, TO A FILE, OR BOTH?
     ENTER 'TERMINAL', 'FILE', OR 'BOTH'
I>T
     FOLLOWING OUTPUT DATA ARE AVAILABLE:

           SECTION
            NUMBER        SECTION CONTENTS
              1.........NODE COORDINATES AND DISPLACEMENTS
              2.........ELEMENT END FORCES
              3.........REACTIONS AT FIXED SUPPORTS
     COMPLETE OUTPUT CONTAINS APPROXIMATELY   99 LINES.
     OUTPUT CONTROL
     ENTER 'ALL', 'SELECTIVE', 'FINISHED', OR 'HELP'.
I>S
     ENTER SECTION NUMBER FOR DESIRED OUTPUT.
I>1
     ENTER DESIRED OUTPUT UNITS.
     'INCHES' OR 'FEET' AND 'POUNDS' OR 'KIPS', OR 'DEFAULT'
I>D
```

(Continued)

Program Execution for Example 2 (Continued)

```
INDICATE AMOUNT OF OUTPUT DESIRED.
ENTER 'ALL', RANGE OF NODES BETWEEN 1 AND   41, OR 'HELP'.
I>A


PROGRAM CBNTBM - ANALYSIS OF 2D BEAM-COLUMNS WITH NONLINEAR SUPPORTS
DATE: 02/15/83                                          TIME: 08:55:22

  HEADING
  EXAMPLE 2 - SEMICIRCULAR ARCH
  41 NODE SOLUTION


  NODE COORDINATES AND DISPLACEMENTS IN GLOBAL COORDINATE SYSTEM
```

NODE NO.	NODE COORDINATES X (IN)	NODE COORDINATES Y (IN)	NODE DISPLACEMENTS X (IN)	NODE DISPLACEMENTS Y (IN)	NODE DISPLACEMENTS ROT (RAD)
1	-180.00	0.00	0.	0.	0.
2	-179.45	14.12	2.278E-03	-1.597E-04	-3.109E-04
3	-177.78	28.16	8.398E-03	-9.506E-04	-5.507E-04
4	-175.03	42.02	1.729E-02	-2.784E-03	-7.239E-04
5	-171.19	55.62	2.795E-02	-5.851E-03	-8.353E-04
6	-166.30	68.88	3.943E-02	-1.015E-02	-8.901E-04
7	-160.38	81.72	5.091E-02	-1.549E-02	-8.938E-04
8	-153.48	94.05	6.169E-02	-2.159E-02	-8.523E-04
9	-145.62	105.80	7.124E-02	-2.803E-02	-7.718E-04
10	-136.87	116.90	7.918E-02	-3.435E-02	-6.586E-04
11	-127.28	127.28	8.528E-02	-4.005E-02	-5.193E-04
12	-116.90	136.87	8.948E-02	-4.466E-02	-3.607E-04
13	-105.80	145.62	9.186E-02	-4.775E-02	-1.896E-04
14	-94.05	153.48	9.263E-02	-4.897E-02	-1.295E-05
15	-81.72	160.38	9.207E-02	-4.806E-02	1.623E-04
16	-68.88	166.30	9.057E-02	-4.491E-02	3.291E-04
17	-55.62	171.19	8.854E-02	-3.954E-02	4.805E-04
18	-42.02	175.03	8.640E-02	-3.211E-02	6.099E-04
19	-28.16	177.78	8.452E-02	-2.293E-02	7.104E-04
20	-14.12	179.45	8.323E-02	-1.246E-02	7.756E-04
21	0.00	180.00	8.274E-02	-1.292E-03	7.991E-04
22	14.12	179.45	8.313E-02	9.892E-03	7.770E-04
23	28.16	177.78	8.432E-02	2.040E-02	7.132E-04
24	42.02	175.03	8.610E-02	2.965E-02	6.141E-04
25	55.62	171.19	8.816E-02	3.718E-02	4.860E-04
26	68.88	166.30	9.012E-02	4.267E-02	3.357E-04
27	81.72	160.38	9.156E-02	4.595E-02	1.700E-04
28	94.05	153.48	9.208E-02	4.701E-02	-4.266E-06
29	105.80	145.62	9.131E-02	4.596E-02	-1.801E-04
30	116.90	136.87	8.893E-02	4.304E-02	-3.507E-04
31	127.28	127.28	8.475E-02	3.861E-02	-5.089E-04
32	136.87	116.90	7.868E-02	3.309E-02	-6.480E-04
33	145.62	105.80	7.080E-02	2.695E-02	-7.613E-04
34	153.48	94.05	6.131E-02	2.068E-02	-8.421E-04
35	160.38	81.72	5.060E-02	1.474E-02	-8.842E-04
36	166.30	68.88	3.919E-02	9.542E-03	-8.813E-04
37	171.19	55.62	2.778E-02	5.386E-03	-8.277E-04
38	175.03	42.02	1.719E-02	2.448E-03	-7.178E-04
39	177.78	28.16	8.349E-03	7.333E-04	-5.463E-04
40	179.45	14.12	2.266E-03	5.320E-05	-3.085E-04
41	180.00	0.00	0.	0.	0.

```
ENTER SECTION NUMBER FOR DESIRED OUTPUT.
I>2
```

(Continued)

Program Execution for Example 2 (Continued)

```
     ENTER DESIRED OUTPUT UNITS.
     'INCHES' OR 'FEET' AND 'POUNDS' OR 'KIPS', OR 'DEFAULT'
I>D
     INDICATE AMOUNT OF OUTPUT DESIRED.
     ENTER 'ALL', RANGE OF ELEMENTS BETWEEN 1 AND   40, OR 'HELP'.
I>1 TO 5


     PROGRAM CBNTBM - ANALYSIS OF 2D BEAM-COLUMNS WITH NONLINEAR SUPPORTS
     DATE: 02/15/83                                          TIME: 08:56:14

       HEADING
       EXAMPLE 2 - SEMICIRCULAR ARCH
       41 NODE SOLUTION


       ELEMENT END FORCES IN ELEMENT COORDINATE SYSTEM
         <------------LEFT END------------>  <-----------RIGHT END----------->
  EL.       X-FORCE      Y-FORCE       MOMENT      X-FORCE      Y-FORCE       MOMENT
  NO.         (P)          (P)         (P-IN)        (P)          (P)         (P-IN)
    1    9.922E+02    7.911E+02    4.930E+04   -9.922E+02   -6.733E+02   -3.895E+04
    2    9.364E+02    7.491E+02    3.895E+04   -9.364E+02   -6.313E+02   -2.920E+04
    3    8.839E+02    7.029E+02    2.920E+04   -8.839E+02   -5.851E+02   -2.010E+04
    4    8.353E+02    6.526E+02    2.010E+04   -8.353E+02   -5.348E+02   -1.171E+04
    5    7.908E+02    5.987E+02    1.171E+04   -7.908E+02   -4.810E+02   -4.076E+03


     DO YOU WANT TO OUTPUT ANOTHER RANGE FOR THIS SECTION?
     ENTER 'YES' OR 'NO'.
I>Y
     INDICATE AMOUNT OF OUTPUT DESIRED.
     ENTER 'ALL', RANGE OF ELEMENTS BETWEEN 1 AND   40, OR 'HELP'.
I>19 23
     ERROR ON LAST ENTRY--REENTER.
I>19 TO 23
   19    6.964E+02  -3.269E+02  -1.181E+04  -6.964E+02   4.447E+02   6.358E+03
   20    7.291E+02  -3.887E+02  -6.358E+03  -7.291E+02   5.065E+02   3.239E+01
   21    7.666E+02  -4.477E+02  -3.239E+01  -7.666E+02   4.477E+02  -6.295E+03
   22    7.994E+02  -3.862E+02   6.295E+03  -7.994E+02   3.862E+02  -1.175E+04
   23    8.272E+02  -3.223E+02   1.175E+04  -8.272E+02   3.223E+02  -1.631E+04


     DO YOU WANT TO OUTPUT ANOTHER RANGE FOR THIS SECTION?
     ENTER 'YES' OR 'NO'.
I>Y
     INDICATE AMOUNT OF OUTPUT DESIRED.
     ENTER 'ALL', RANGE OF ELEMENTS BETWEEN 1 AND   40, OR 'HELP'.
I>36 TO 41
ERROR ON LAST ENTRY--REENTER.
I>36 TO 40
   36    7.070E+02   5.369E+02  -3.796E+03  -7.070E+02  -5.369E+02   1.138E+04
   37    6.627E+02   5.907E+02  -1.138E+04  -6.627E+02  -5.907E+02   1.973E+04
   38    6.143E+02   6.409E+02  -1.973E+04  -6.143E+02  -6.409E+02   2.879E+04
   39    5.621E+02   6.871E+02  -2.879E+04  -5.621E+02  -6.871E+02   3.850E+04
   40    5.065E+02   7.291E+02  -3.850E+04  -5.065E+02  -7.291E+02   4.881E+04


     DO YOU WANT TO OUTPUT ANOTHER RANGE FOR THIS SECTION?
     ENTER 'YES' OR 'NO'.
I>N
```

(Continued)

Program Execution for Example 2 (Concluded)

```
     ENTER SECTION NUMBER FOR DESIRED OUTPUT.
I>3
     ENTER DESIRED OUTPUT UNITS.
     'INCHES' OR 'FEET' AND 'POUNDS' OR 'KIPS', OR 'DEFAULT'
I>D


     PROGRAM CBNTBM - ANALYSIS OF 2D BEAM-COLUMNS WITH NONLINEAR SUPPORTS
     DATE: 02/15/83                                          TIME: 08:57:38

       HEADING
       EXAMPLE 2 - SEMICIRCULAR ARCH
       41 NODE SOLUTION


     REACTIONS AT FIXED SUPPORTS IN GLOBAL COORDINATE SYSTEM
      NODE         X-REACT      Y-REACT    MOM-REACT
       NO.           (F)          (F)        (F-IN)
        1       -7.516E+02   1.073E+03   4.930E+04
       41       -7.484E+02   4.775E+02   4.881E+04
     ENTER SECTION NUMBER FOR DESIRED OUTPUT.
I>F
     DO YOU WANT OUTPUT WITH DIFFERENT UNITS?
     ENTER 'YES' OR 'NO'.
I>N
     OUTPUT COMPLETE
     DO YOU WANT TO EDIT INPUT DATA FOR THE PROBLEM
     JUST COMPLETED?  ENTER 'YES' OR 'NO'
I>N
     DO YOU WANT TO MAKE ANOTHER 'CBNTBM' RUN?  ENTER 'YES' OR 'NO'
I>N
     ********** NORMAL TERMINATION **********
```

Example 3--Pile Bent

87. The pile bent shown in Figure 16a was modeled for analysis as shown in Figure 16b. The resistance of the soil was treated as distributed linearly elastic springs with uniform stiffness for lateral support and as concentrated linearly elastic springs acting parallel to the pile axis at the base. Because an approximate stiffness matrix is used for elements with distributed springs, the number of nodes (elements) used for the sections of the piles below ground will influence the accuracy of the solution.

88. Program prompts and user responses are shown on pages 59 and 60. Data were entered from the predefined file listed on page 58. All output data, including an echoprint of input data and selective output, were directed to a file. The output file, listed following normal termination of the run, is shown on pages 61-64.

89. Solutions for this structure using 10 and 20 elements to represent the embedded portions of the piles exhibited only small differences (less than 1 percent) in results from those given on pages 61-64.

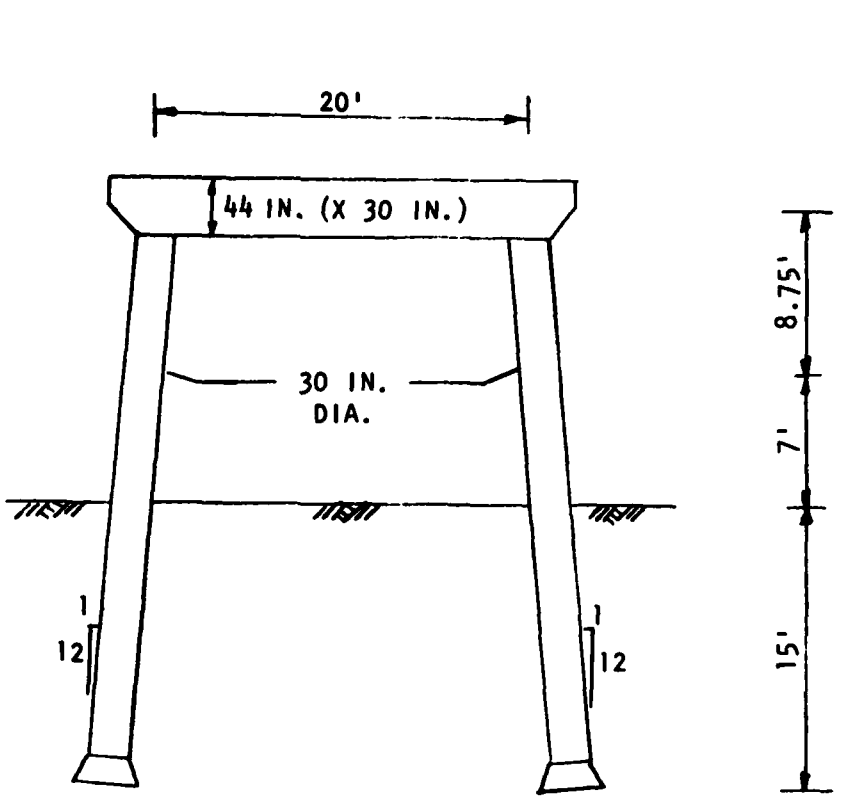

a. Pile bent

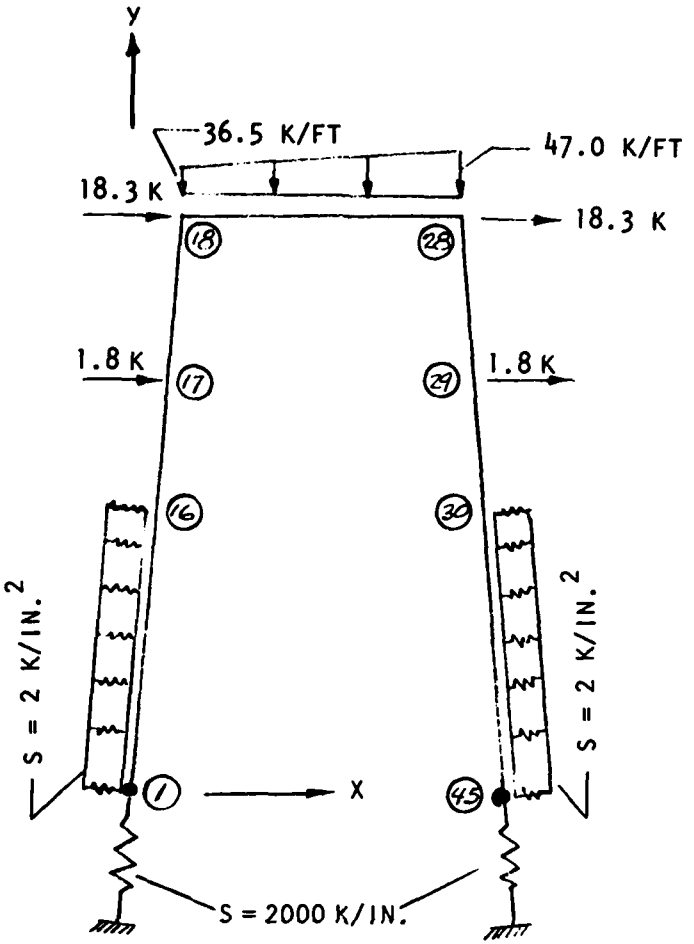

b. Model for analysis

Figure 16. Example 3--pile bent

Input Data File for Example 3

```
1000  EXAMPLE  3 - PILE BENT WITH LINEAR SPRING SUPPORTS
1010  GEOMETRY  I
1020   1  0.  0.
1030 16 15.  180.
1040 17 22.  264.
1050 18 30.75  369.
1060 28 270.8  369
1070 29 279.5 264.
1080 30 286.5 180.
1090 45 301.5 0.
1100  PROPERTIES  I  K
1110  1  18  4000.  707.  39761.  707.  39761.
1120 18  28  4000. 1452. 255552. 1452. 255552.
1130 28 45 4000.  707. 39761.  707. 39761.
1140  LOADS  F  K
1150  C  17  1.8  0.0  0.0
1160  C  18  18.3  0.0  0.0
1170  C  28  18.3  0.0  0.0
1180  C  30  1.8  0.0  0.0
1190  D Y 18  -36.5  28  -47.
1200  LINEAR  I  K
1210  C  1  -94.76  2000.  0.0
1220  C 45  -85.24  2000.  0.
1230  D  Y  1  2.0  16  2.0
1240  D  Y  30  2.0  45  2.0
1250  FINISH
```

Program Execution for Example 3

```
     PROGRAM CBNTBM - ANALYSIS OF 2D BEAM COLUMNS WITH NONLINEAR SUPPORTS
     DATE: 02/15/83                                          TIME: 09:16:17
     ARE INPUT DATA TO BE READ FROM TERMINAL OR FILE?
     ENTER 'TERMINAL' OR 'FILE'
I>F
     ENTER INPUT FILE NAME (6 CHARACTERS MAXIMUM)
I>CBNT3
     INPUT COMPLETE
     DO YOU WANT INPUT DATA ECHOPRINTED TO YOUR
     TERMINAL, TO A FILE, TO BOTH, OR NEITHER?
     ENTER 'TERMINAL', 'FILE', 'BOTH', OR 'NEITHER'
I>F
     ENTER OUTPUT FILE NAME (6 CHARACTERS MAXIMUM)
I>CBNT30
     DO YOU WANT TO EDIT INPUT DATA?  ENTER 'YES' OR 'NO'
I>N
     DO YOU WANT TO CONTINUE SOLUTION?  ENTER 'YES' OR 'NO'
I>Y
     DO YOU WANT AXIAL FORCE EFFECTS ON BENDING STIFFNESS INCLUDED
     IN THE SOLUTION?  ENTER 'YES' OR 'NO'
I>N
     SOLUTION COMPLETE
     DO YOU WANT RESULTS WRITTEN TO YOUR TERMINAL,
     TO FILE 'CBNT30', OR BOTH?
     ENTER 'TERMINAL', 'FILE', OR 'BOTH'
I>F
     FOLLOWING OUTPUT DATA ARE AVAILABLE:

           SECTION
            NUMBER        SECTION CONTENTS
              1.........NODE COORDINATES AND DISPLACEMENTS
              2.........ELEMENT END FORCES
              4.........FORCES IN CONCENTRATED LINEAR SPRINGS
              5.........FORCES IN DISTRIBUTED LINEAR SPRINGS
     COMPLETE OUTPUT CONTAINS APPROXIMATELY  155 LINES.
     OUTPUT CONTROL
     ENTER 'ALL', 'SELECTIVE', 'FINISHED', OR 'HELP'.
I>S
     ENTER SECTION NUMBER FOR DESIRED OUTPUT.
I>1
     ENTER DESIRED OUTPUT UNITS.
     'INCHES' OR 'FEET' AND 'POUNDS' OR 'KIPS', OR 'DEFAULT'
I>D
     INDICATE AMOUNT OF OUTPUT DESIRED.
     ENTER 'ALL', RANGE OF NODES BETWEEN 1 AND   45, OR 'HELP'.
I>17 TO 29


     DO YOU WANT TO OUTPUT ANOTHER RANGE FOR THIS SECTION?
     ENTER 'YES' OR 'NO'.
I>N
     ENTER SECTION NUMBER FOR DESIRED OUTPUT.
I>2
     ENTER DESIRED OUTPUT UNITS.
     'INCHES' OR 'FEET' AND 'POUNDS' OR 'KIPS', OR 'DEFAULT'
I>F K
```

(Continued)

Program Execution for Example 3 (Concluded)

```
     INDICATE AMOUNT OF OUTPUT DESIRED.
     ENTER 'ALL', RANGE OF ELEMENTS BETWEEN 1 AND   44, OR 'HELP'.
I>18 TO 28


     DO YOU WANT TO OUTPUT ANOTHER RANGE FOR THIS SECTION?
     ENTER 'YES' OR 'NO'.
I>N
     ENTER SECTION NUMBER FOR DESIRED OUTPUT.
I>4
     ENTER DESIRED OUTPUT UNITS.
     'INCHES' OR 'FEET' AND 'POUNDS' OR 'KIPS', OR 'DEFAULT'
I>I N
     ENTER SECTION NUMBER FOR DESIRED OUTPUT.
I>5
     ENTER DESIRED OUTPUT UNITS.
     'INCHES' OR 'FEET' AND 'POUNDS' OR 'KIPS', OR 'DEFAULT'
I>D
     INDICATE AMOUNT OF OUTPUT DESIRED.
     ENTER 'ALL', RANGE OF NODES BETWEEN 1 AND   44, OR 'HELP'.
I 1 TO 16


     DO YOU WANT TO OUTPUT ANOTHER RANGE FOR THIS SECTION?
     ENTER 'YES' OR 'NO'.
I>Y
     INDICATE AMOUNT OF OUTPUT DESIRED.
     ENTER 'ALL', RANGE OF NODES BETWEEN 1 AND   44, OR 'HELP'.
I>30 TO 44


     DO YOU WANT TO OUTPUT ANOTHER RANGE FOR THIS SECTION?
     ENTER 'YES' OR 'NO'.
I>N
     ENTER SECTION NUMBER FOR DESIRED OUTPUT.
I>F
     DO YOU WANT OUTPUT WITH DIFFERENT UNITS?
     ENTER 'YES' OR 'NO'.
I>N
     OUTPUT COMPLETE
     DO YOU WANT TO EDIT INPUT DATA FOR THE PROBLEM
     JUST COMPLETED?  ENTER 'YES' OR 'NO'
I>N
     DO YOU WANT TO MAKE ANOTHER 'CBNTBM' RUN?  ENTER 'YES' OR 'NO'
I>N
     ********** NORMAL TERMINATION **********
      .440 CP SECONDS EXECUTION TIME
```

Output File for Example 3

```
PROGRAM CBNTBM - ANALYSIS OF 2D BEAM-COLUMNS WITH NONLINEAR SUPPORTS
DATE: 02/15/83                                              TIME: 09:16:50

I.--INPUT DATA

1.--HEADING

EXAMPLE  3 - PILE BENT WITH LINEAR SPRING SUPPORTS
```

2.--GEOMETRY DATA

NODE NO.	NODE COORDINATES X (IN)	Y (IN)	SEGMENT TYPE	CENTER COORDINATES X (IN)	Y (IN)
1	0.00	0.00	STRAIGHT		
16	15.00	180.00	STRAIGHT		
17	22.00	264.00	STRAIGHT		
18	30.75	369.00	STRAIGHT		
28	270.80	369.00	STRAIGHT		
29	279.50	264.00	STRAIGHT		
30	286.50	180.00	STRAIGHT		
45	301.50	0.00			

3.--SECTION PROPERTIES

NODE NUMBER START	STOP	MODULUS OF ELASTICITY (KSI)	SECTION PROPERTIES START AREA (SQIN)	START INERTIA (IN**4)	STOP AREA (SQIN)	STOP INERTIA (IN**4)
1	18	4.00E+03	707.00	39761.00	707.00	39761.00
18	28	4.00E+03	1452.00	255552.00	1452.00	255552.00
28	45	4.00E+03	707.00	39761.00	707.00	39761.00

4.--LOAD DATA

4.A.--CONCENTRATED LOADS

CONCENTRATED LOADS NODE NO.	X-LOAD (K)	Y-LOAD (K)	COUPLE (K-FT)
17	1.80	0.00	0.00
18	18.30	0.00	0.00
28	18.30	0.00	0.00
30	1.80	0.00	0.00

4.B.--DISTRIBUTED LOADS

LOAD DIRECT	START NODE NO.	START LOAD (K/FT)	STOP NODE NO.	STOP LOAD (K/FT)
Y	18	-36.50	28	-47.00

5.--FIXED SUPPORT DATA

NONE

(Continued)

Output File for Example 3 (Continued)

6.--LINEAR SPRING DATA

6.A.--CONCENTRATED LINEAR SPRINGS

SPRING NODE NO.	ANGLE (DEG)	SPRING STIFFNESSES TRANSLATION (K/I)	ROTATION (K-I/RAD)
1	-94.76	2000.00	0.00
45	-85.24	2000.00	0.00

6.B.--DISTRIBUTED LINEAR SPRINGS

SPRING DIRECT	<-----START-----> NODE NO.	STIFFNESS (K/SQIN)	<------STOP-----> NODE NO.	STIFFNESS (K/SQIN)
Y	1	2.000E+00	16	2.000E+00
Y	30	2.000E+00	45	2.000E+00

7.--NONLINEAR SPRING DATA

NONE

(Continued)

Output File for Example 3 (Continued)

PROGRAM CBNTBM - ANALYSIS OF 2D BEAM-COLUMNS WITH NONLINEAR SUPPORTS
DATE: 02/15/83 TIME: 09:17:30

HEADING
EXAMPLE 3 - PILE BENT WITH LINEAR SPRING SUPPORTS

NODE COORDINATES AND DISPLACEMENTS IN GLOBAL COORDINATE SYSTEM

NODE NO.	NODE COORDINATES X (IN)	Y (IN)	NODE DISPLACEMENTS X (IN)	Y (IN)	ROT (RAD)
17	22.00	264.00	2.401E-01	-2.447E-01	-1.677E-03
18	30.75	369.00	4.173E-01	-2.735E-01	-1.679E-03
19	54.76	369.00	4.171E-01	-3.130E-01	-1.576E-03
20	78.76	369.00	4.169E-01	-3.478E-01	-1.302E-03
21	102.77	369.00	4.167E-01	-3.745E-01	-9.014E-04
22	126.77	369.00	4.165E-01	-3.904E-01	-4.173E-04
23	150.78	369.00	4.163E-01	-3.942E-01	1.046E-04
24	174.78	369.00	4.162E-01	-3.855E-01	6.179E-04
25	198.79	369.00	4.160E-01	-3.650E-01	1.075E-03
26	222.79	369.00	4.158E-01	-3.347E-01	1.427E-03
27	246.80	369.00	4.156E-01	-2.977E-01	1.624E-03
28	270.80	369.00	4.154E-01	-2.584E-01	1.614E-03
29	279.50	264.00	4.226E-01	-2.405E-01	-1.143E-03

PROGRAM CBNTBM - ANALYSIS OF 2D BEAM-COLUMNS WITH NONLINEAR SUPPORTS
DATE: 02/15/83 TIME: 09:18:01

HEADING
EXAMPLE 3 - PILE BENT WITH LINEAR SPRING SUPPORTS

ELEMENT END FORCES IN ELEMENT COORDINATE SYSTEM

EL. NO.	LEFT END X-FORCE (K)	Y-FORCE (K)	MOMENT (K-FT)	RIGHT END X-FORCE (K)	Y-FORCE (K)	MOMENT (K-FT)
18	4.613E+01	3.762E+02	-1.506E+01	-4.613E+01	-3.022E+02	6.939E+02
19	4.613E+01	3.022E+02	-6.939E+02	-4.613E+01	-2.260E+02	1.223E+03
20	4.613E+01	2.260E+02	-1.223E+03	-4.613E+01	-1.477E+02	1.597E+03
21	4.613E+01	1.477E+02	-1.597E+03	-4.613E+01	-6.736E+01	1.813E+03
22	4.613E+01	6.736E+01	-1.813E+03	-4.613E+01	1.511E+01	1.865E+03
23	4.613E+01	-1.511E+01	-1.865E+03	-4.613E+01	9.968E+01	1.750E+03
24	4.613E+01	-9.968E+01	-1.750E+03	-4.613E+01	1.863E+02	1.464E+03
25	4.613E+01	-1.863E+02	-1.464E+03	-4.613E+01	2.751E+02	1.003E+03
26	4.613E+01	-2.751E+02	-1.003E+03	-4.613E+01	3.660E+02	3.625E+02
27	4.613E+01	-3.660E+02	-3.625E+02	-4.613E+01	4.590E+02	-4.623E+02
28	4.627E+02	2.631E+01	4.623E+02	-4.627E+02	-2.631E+01	-2.313E+02

(Continued)

Output File for Example 3 (Concluded)

```
PROGRAM CBNTBM - ANALYSIS OF 2D BEAM-COLUMNS WITH NONLINEAR SUPPORTS
DATE: 02/15/83                                              TIME: 09:18:16

  HEADING
  EXAMPLE  3 - PILE BENT WITH LINEAR SPRING SUPPORTS


FORCES IN CONCENTRATED LINEAR SPRINGS
          <------TRANSLATION SPRING-------->          <---ROTATION SPRING--->
 NODE      ANGLE      DEFORMATION        FORCE        DEFORMATION        FORCE
  NO.      (DEG)          (IN)            (K)           (RAD)           (K-IN)
    1     -94.76       1.885E-01    -3.771E+02        -1.015E-03    0.
   45     -85.24       2.314E-01    -4.629E+02        -1.885E-03    0.


PROGRAM CBNTBM - ANALYSIS OF 2D BEAM-COLUMNS WITH NONLINEAR SUPPORTS
DATE: 02/15/83                                              TIME: 09:18:30

  HEADING
  EXAMPLE  3 - PILE BENT WITH LINEAR SPRING SUPPORTS


FORCES IN DISTRIBUTED LINEAR SPRINGS IN ELEMENT COORDINATE SYSTEM
 EL.        X-SPRING FORCES (P/IN)          Y-SPRING FORCES (P/IN)
 NO.          LEFT END    RIGHT END          LEFT END    RIGHT END
   1          0.          0.                -1.657E+02  -1.412E+02
   2          0.          0.                -1.412E+02  -1.167E+02
   3          0.          0.                -1.167E+02  -9.219E+01
   4          0.          0.                -9.219E+01  -6.747E+01
   5          0.          0.                -6.747E+01  -4.246E+01
   6          0.          0.                -4.246E+01  -1.705E+01
   7          0.          0.                -1.705E+01   8.921E+00
   8          0.          0.                 8.921E+00   3.559E+01
   9          0.          0.                 3.559E+01   6.309E+01
  10          0.          0.                 6.309E+01   9.158E+01
  11          0.          0.                 9.158E+01   1.212E+02
  12          0.          0.                 1.212E+02   1.519E+02
  13          0.          0.                 1.519E+02   1.839E+02
  14          0.          0.                 1.839E+02   2.172E+02
  15          0.          0.                 2.172E+02   2.517E+02
  16          0.          0.                 0.          0.
  30          0.          0.                -5.186E+02  -4.693E+02
  31          0.          0.                -4.693E+02  -4.194E+02
  32          0.          0.                -4.194E+02  -3.695E+02
  33          0.          0.                -3.695E+02  -3.198E+02
  34          0.          0.                -3.198E+02  -2.705E+02
  35          0.          0.                -2.705E+02  -2.218E+02
  36          0.          0.                -2.218E+02  -1.737E+02
  37          0.          0.                -1.737E+02  -1.263E+02
  38          0.          0.                -1.263E+02  -7.937E+01
  39          0.          0.                -7.937E+01  -3.298E+01
  40          0.          0.                -3.298E+01   1.300E+01
  41          0.          0.                 1.300E+01   5.871E+01
  42          0.          0.                 5.871E+01   1.042E+02
  43          0.          0.                 1.042E+02   1.497E+02
  44          0.          0.                 1.497E+02   1.951E+02
```

Example 4--U-Frame Channel Liner

90. The U-frame channel liner and analytical model are shown in Figures 17a and 17b. Because the structure and loading are symmetric, only half of the system was analyzed. The soil was modeled using nonlinear distributed springs. Soil properties along the vertical walls were assumed to vary linearly from zero at the top to the behavior shown in Figure 17c. Soil along the base was assumed to provide uniform resistance as shown in Figure 17d. As in all cases with distributed springs, the number of nodes (elements) will influence the solution.

91. The input file and echoprint of input data for the model shown are given on pages 67-69.

92. Complete output for this example is given on pages 70-72.

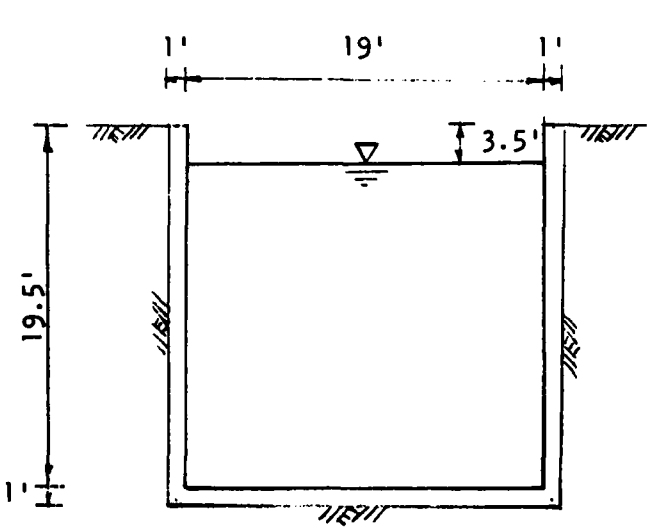

a. U-frame

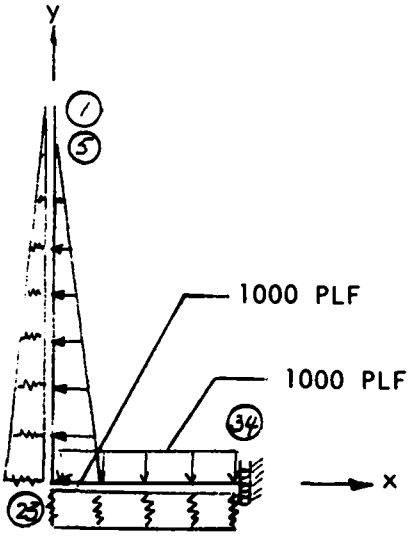

b. Model

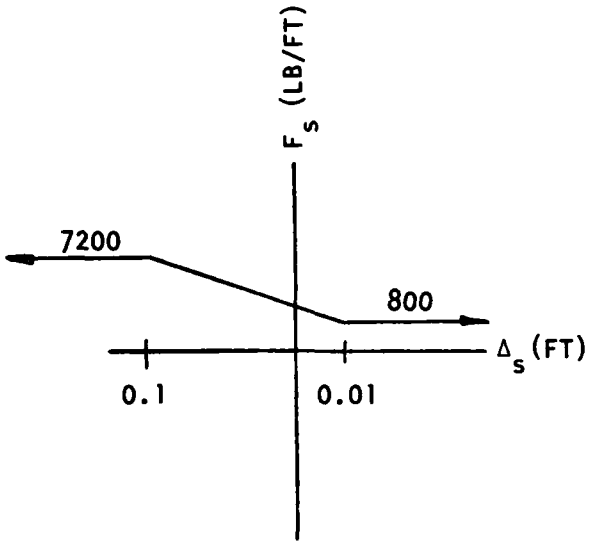

c. Soil spring on wall at base

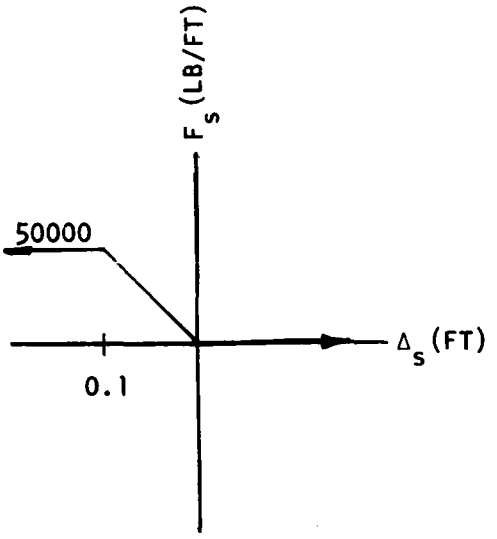

d. Soil springs of base

Figure 17. Example 4--U-frame channel liner

Input Data File for Example 4

```
1000 EXAMPLE 4 - U-FRAME CHANNEL LINER WITH NONLINEAR SPRING SUPPORTS
1010 GEOMETRY  F
1020 1 0.  20.
1030 4 0.0 17.
1040 5 0.0 16.5
1050 6 0.0 16.
1060 21 0.0 1.
1070 22 0.0 0.5
1080 23 0.0 0.0
1090 24 0.5 0.0
1100 25 1.0 0.0
1110 34 10. 0.0
1120 PROPERTIES  I  K
1130 1 34 3830. 144. 1728. 144. 1728.
1140 LOADS  F  F
1150 D Y 5 0.0 22 -1000.
1160 D Y 24 -1000. 34 -1000.
1170 FIXED  I
1180 34 0.0 FREE 0.0
1190 NONLINEAR  F  F
1200 D Y 1 2 0.01 0.0
1210 -10. 1.0
1220  0.0 0.0
1230 E 23 2 0.01 100.
1240 -10.0 1.0
1250 72.0 8.0
1260 D Y 23 2 0.01 1000.
1270 -10.0 0.0
1280 50.0 0.0
1290 E 34 2 0.01 1000.0
1300 -10.0 0.0
1310 50.0 0.0
1320 FINISHED
```

Echoprint of Input Data for Example 4

```
PROGRAM CBNTBM - ANALYSIS OF 2D BEAM COLUMNS WITH NONLINEAR SUPPORTS
DATE: 02/15/83                                          TIME: 09:41:47

I.--INPUT DATA

1.--HEADING

EXAMPLE 4 - U-FRAME CHANNEL LINER WITH NONLINEAR SPRING SUPPORTS
```

2.--GEOMETRY DATA

NODE NO.	NODE COORDINATES X (FT)	Y (FT)	SEGMENT TYPE	CENTER COORDINATES X (FT)	Y (FT)
1	0.00	20.00	STRAIGHT		
4	0.00	17.00	STRAIGHT		
5	0.00	16.50	STRAIGHT		
6	0.00	16.00	STRAIGHT		
21	0.00	1.00	STRAIGHT		
22	0.00	.50	STRAIGHT		
23	0.00	0.00	STRAIGHT		
24	.50	0.00	STRAIGHT		
25	1.00	0.00	STRAIGHT		
34	10.00	0.00			

3.--SECTION PROPERTIES

NODE NUMBER START	NODE NUMBER STOP	MODULUS OF ELASTICITY (KSI)	SECTION PROPERTIES AT START: AREA (SQIN)	AT START: INERTIA (IN**4)	AT STOP: AREA (SQIN)	AT STOP: INERTIA (IN**4)
1	34	3.83E+03	144.00	1728.00	144.00	1728.00

4.--LOAD DATA

4.A.--CONCENTRATED LOADS

NONE

4.B.--DISTRIBUTED LOADS

LOAD DIRECT	START: NODE NO.	START: LOAD (F/FT)	STOP: NODE NO.	STOP: LOAD (F/FT)
Y	5	0.00	22	-1000.00
Y	24	-1000.00	34	-1000.00

5.--FIXED SUPPORT DATA

SUPPORT NODE NO.	SPECIFIED DISPLACEMENTS X-DISP. (IN)	Y-DISP. (IN)	ROTATION (RAD)
34	0.00	FREE	0.00

6.--LINEAR SPRING DATA

NONE

(Continued)

Echoprint of Input Data for Example 4 (Concluded)

7.--NONLINEAR SPRING DATA

7.A.--NONLINEAR CONCENTRATED SPRINGS

NONE

7.B.--NONLINEAR DISTRIBUTED SPRINGS

DISTRIBUTION	SPRING DIRECTION	SPRING NODE NO.	CURVE COORD. DISPLACEMENT (FT)	MULTIPLIERS FORCE (F/FT)
STARTS	Y	1	1.00E-02	0.
DISP. COORDS.	-10.00	1.00		
FORCE COORDS.	0.00	0.00		

DISTRIBUTION	SPRING DIRECTION	SPRING NODE NO.	CURVE COORD. DISPLACEMENT (FT)	MULTIPLIERS FORCE (F/FT)
ENDS	Y	23	1.00E-02	1.00E+02
DISP. COORDS.	-10.00	1.00		
FORCE COORDS.	72.00	8.00		

DISTRIBUTION	SPRING DIRECTION	SPRING NODE NO.	CURVE COORD. DISPLACEMENT (FT)	MULTIPLIERS FORCE (F/FT)
STARTS	Y	23	1.00E-02	1.00E+03
DISP. COORDS.	-10.00	0.00		
FORCE COORDS.	50.00	0.00		

DISTRIBUTION	SPRING DIRECTION	SPRING NODE NO.	CURVE COORD. DISPLACEMENT (FT)	MULTIPLIERS FORCE (F/FT)
ENDS	Y	34	1.00E-02	1.00E+03
DISP. COORDS.	-10.00	0.00		
FORCE COORDS.	50.00	0.00		

Output for Example 4

PROGRAM CBNTBM - ANALYSIS OF 2D BEAM-COLUMNS WITH NONLINEAR SUPPORTS
DATE: 02/15/83 TIME: 09:42:30

HEADING
EXAMPLE 4 - U-FRAME CHANNEL LINER WITH NONLINEAR SPRING SUPPORTS

NODE COORDINATES AND DISPLACEMENTS IN GLOBAL COORDINATE SYSTEM

NODE	NODE COORDINATES		<--------NODE DISPLACEMENTS-------->		
NO.	X (FT)	Y (FT)	X (FT)	Y (FT)	ROT (RAD)
1	0.00	20.00	4.676E-02	7.261E-04	-2.810E-03
2	0.00	19.00	4.395E-02	7.261E-04	-2.810E-03
3	0.00	18.00	4.114E-02	7.261E-04	-2.809E-03
4	0.00	17.00	3.833E-02	7.261E-04	-2.807E-03
5	0.00	16.50	3.693E-02	7.261E-04	-2.805E-03
6	0.00	16.00	3.553E-02	7.261E-04	-2.801E-03
7	0.00	15.00	3.273E-02	7.261E-04	-2.788E-03
8	0.00	14.00	2.995E-02	7.261E-04	-2.765E-03
9	0.00	13.00	2.721E-02	7.261E-04	-2.731E-03
10	0.00	12.00	2.449E-02	7.261E-04	-2.685E-03
11	0.00	11.00	2.184E-02	7.261E-04	-2.624E-03
12	0.00	10.00	1.925E-02	7.261E-04	-2.548E-03
13	0.00	9.00	1.675E-02	7.261E-04	-2.458E-03
14	0.00	8.00	1.434E-02	7.261E-04	-2.354E-03
15	0.00	7.00	1.204E-02	7.261E-04	-2.236E-03
16	0.00	6.00	9.875E-03	7.261E-04	-2.106E-03
17	0.00	5.00	7.837E-03	7.261E-04	-1.965E-03
18	0.00	4.00	5.945E-03	7.261E-04	-1.816E-03
19	0.00	3.00	4.208E-03	7.261E-04	-1.658E-03
20	0.00	2.00	2.633E-03	7.261E-04	-1.488E-03
21	0.00	1.00	1.236E-03	7.261E-04	-1.304E-03
22	0.00	.50	6.079E-04	7.261E-04	-1.205E-03
23	0.00	0.00	3.118E-05	7.261E-04	-1.100E-03
24	.50	0.00	2.963E-05	2.033E-04	-9.911E-04
25	1.00	0.00	2.807E-05	-2.650E-04	-8.823E-04
26	2.00	0.00	2.495E-05	-1.042E-03	-6.747E-04
27	3.00	0.00	2.183E-05	-1.623E-03	-4.915E-04
28	4.00	0.00	1.871E-05	-2.036E-03	-3.399E-04
29	5.00	0.00	1.559E-05	-2.313E-03	-2.219E-04
30	6.00	0.00	1.248E-05	-2.490E-03	-1.356E-04
31	7.00	0.00	9.358E-06	-2.594E-03	-7.648E-05
32	8.00	0.00	6.237E-06	-2.650E-03	-3.878E-05
33	9.00	0.00	3.118E-06	-2.677E-03	-1.569E-05
34	10.00	0.00	0.	-2.684E-03	0.

(Continued)

Output for Example 4 (Continued)

ELEMENT END FORCES IN ELEMENT COORDINATE SYSTEM

EL. NO.	<----------LEFT END----------> X-FORCE (P)	Y-FORCE (P)	MOMENT (P-FT)	<----------RIGHT END----------> X-FORCE (P)	Y-FORCE (P)	MOMENT (P-FT)
1	0.	-1.080E-07	-1.155E-07	0.	-2.000E+01	6.667E+00
2	0.	2.000E+01	-6.667E+00	0.	-8.000E+01	5.333E+01
3	0.	8.000E+01	-5.333E+01	0.	-1.800E+02	1.800E+02
4	0.	1.800E+02	-1.800E+02	0.	-2.450E+02	2.858E+02
5	0.	2.450E+02	-2.858E+02	0.	-3.122E+02	4.253E+02
6	0.	3.122E+02	-4.253E+02	0.	-4.297E+02	7.982E+02
7	0.	4.297E+02	-7.982E+02	0.	-5.247E+02	1.278E+03
8	0.	5.247E+02	-1.278E+03	0.	-5.972E+02	1.840E+03
9	0.	5.972E+02	-1.840E+03	0.	-6.472E+02	2.464E+03
10	0.	6.472E+02	-2.464E+03	0.	-6.747E+02	3.127E+03
11	0.	6.747E+02	-3.127E+03	0.	-6.797E+02	3.806E+03
12	0.	6.797E+02	-3.806E+03	0.	-6.622E+02	4.479E+03
13	0.	6.622E+02	-4.479E+03	0.	-6.222E+02	5.123E+03
14	0.	6.222E+02	-5.123E+03	0.	-5.597E+02	5.716E+03
15	0.	5.597E+02	-5.716E+03	0.	-4.628E+02	6.228E+03
16	0.	4.628E+02	-6.228E+03	0.	-4.045E+02	6.657E+03
17	0.	4.045E+02	-6.657E+03	0.	-4.158E+02	7.061E+03
18	0.	4.158E+02	-7.061E+03	0.	-5.007E+02	7.513E+03
19	0.	5.007E+02	-7.513E+03	0.	-6.617E+02	8.088E+03
20	0.	6.617E+02	-8.088E+03	0.	-8.995E+02	8.858E+03
21	0.	8.995E+02	-8.858E+03	0.	-1.047E+03	9.350E+03
22	3.725E-09	1.047E+03	-9.350E+03	-3.725E-09	-1.720E+03	1.003E+04
23	1.720E+03	-2.980E-08	-1.003E+04	-1.720E+03	2.980E-08	1.003E+04
24	1.720E+03	1.118E-08	-1.003E+04	-1.720E+03	4.858E+02	9.917E+03
25	1.720E+03	-4.858E+02	-9.917E+03	-1.720E+03	1.150E+03	9.067E+03
26	1.720E+03	-1.150E+03	-9.067E+03	-1.720E+03	1.477E+03	7.725E+03
27	1.720E+03	-1.477E+03	-7.725E+03	-1.720E+03	1.556E+03	6.192E+03
28	1.720E+03	-1.556E+03	-6.192E+03	-1.720E+03	1.464E+03	4.670E+03
29	1.720E+03	-1.464E+03	-4.670E+03	-1.720E+03	1.259E+03	3.302E+03
30	1.720E+03	-1.259E+03	-3.302E+03	-1.720E+03	9.858E+02	2.175E+03
31	1.720E+03	-9.858E+02	-2.175E+03	-1.720E+03	6.732E+02	1.343E+03
32	1.720E+03	-6.732E+02	-1.343E+03	-1.720E+03	3.407E+02	8.350E+02
33	1.720E+03	-3.407E+02	-8.350E+02	-1.720E+03	1.490E-08	6.643E+02

(Continued)

Output for Example 4 (Concluded)

REACTIONS AT FIXED SUPPORTS IN GLOBAL COORDINATE SYSTEM

NODE NO.	X-REACT (P)	Y-REACT (P)	MOM-REACT (P-FT)
34	-1.720E+03	1.490E-08	6.643E+02

FORCES IN DISTRIBUTED NONLINEAR SPRINGS IN ELEMENT COORDINATE SYSTEM

EL. NO.	X-SPRING FORCES (P/FT) LEFT END	X-SPRING FORCES (P/FT) RIGHT END	Y-SPRING FORCES (P/FT) LEFT END	Y-SPRING FORCES (P/FT) RIGHT END
1	0.	0.	0.	4.000E+01
2	0.	0.	4.000E+01	8.000E+01
3	0.	0.	8.000E+01	1.200E+02
4	0.	0.	1.200E+02	1.400E+02
5	0.	0.	1.400E+02	1.600E+02
6	0.	0.	1.600E+02	2.000E+02
7	0.	0.	2.000E+02	2.400E+02
8	0.	0.	2.400E+02	2.800E+02
9	0.	0.	2.800E+02	3.200E+02
10	0.	0.	3.200E+02	3.600E+02
11	0.	0.	3.600E+02	4.000E+02
12	0.	0.	4.000E+02	4.400E+02
13	0.	0.	4.400E+02	4.800E+02
14	0.	0.	4.800E+02	5.200E+02
15	0.	0.	5.200E+02	5.652E+02
16	0.	0.	5.652E+02	6.944E+02
17	0.	0.	6.944E+02	8.287E+02
18	0.	0.	8.287E+02	9.665E+02
19	0.	0.	9.665E+02	1.106E+03
20	0.	0.	1.106E+03	1.244E+03
21	0.	0.	1.244E+03	1.313E+03
22	0.	0.	1.313E+03	1.380E+03
23	0.	0.	0.	0.
24	0.	0.	0.	1.325E+02
25	0.	0.	1.325E+02	5.209E+02
26	0.	0.	5.209E+02	8.113E+02
27	0.	0.	8.113E+02	1.018E+03
28	0.	0.	1.018E+03	1.157E+03
29	0.	0.	1.157E+03	1.244E+03
30	0.	0.	1.244E+03	1.297E+03
31	0.	0.	1.297E+03	1.325E+03
32	0.	0.	1.325E+03	1.338E+03
33	0.	0.	1.338E+03	1.342E+03

Destroy this report when no longer.needed. Do not return it to the originator.

The findings in this report are not to be construed as an official Department of the Army position unless so designated by other authorized documents.

The contents of this report are not to be used for advertising, publication, or promotional purposes. Citation of trade names does not constitute an official endorsement or approval of the use of such commercial products.

END

FILMED

8

DTIC